T CAL MANUAL
No. 5- 0- 16-1

HEADQUART RS
DEPARTMENT OF THE ARMY
WAS IN TON, D.C., *11 April 1969*

ATO ,O A I ATIO AL, I CT A AL UPPO T POT MAINT A C MA AL I CL I AI A T

CHA , AIL : ½ TO ; O AXLE, WH L F N 0- 7-900 (MA A MO L CI I) 1 -1 TH 14 (AP LICA L TO LITTL FO OS O L -) O A I 1 1 (A LICA L TO Y O L 6-) F 0-0 7-

Current of 1 J uary 1

		Paragraph	P
C R 1.	I TRODUCTION		
Section I.	Gen	1-1, 1-2	3
II.	D iption d data	1-3—1-5	3
C ER 2.	OP ATING IN TRUCTION		
Section I.	Service upon re ipt of terial	2-1—2-3	11
II.	ove ent to a n worksite	2-4, 2-5	11
III.	Controls d t ents	2-6	11
IV.	Operation of equip ent	2-7—2-11	11
CHA ER 3.	OP RATOR'S AND ORGANI ATIONAL MAINTENANCE INSTRUCTIONS		
Section I.	Operator and or ni tional te ce repair parts, tools and equip ent	3-1, 3-2	13
II.	Preventive intenance checks and servi	3-3, 3-4	13
III.	Op ator's te	3-5—3-11	13—14
IV.	Troubl hooting	3-12	15
V	Wheels, tir d tub	3-13—3-16	15
VI.	Servi brakes	3-17—3-23	19—21
VII.	Trailer electrical system	3-24—3-26	24
VIII	Frame mbly	3-27—3-36	30—36
CHAP R 4	SHIPMENT AND LIMITED STORAGE AND DEMOLITION TO PREVENT EN MY USE		
Section I	Shipment d li ted stor e	4-1—4-4	37
II	Demolition of terial to prevent enemy use	4-5—4-9	38
CHAPTER 5	DIR CT SUPPORT, GENERAL SUPPORT, AND DEPOT MAINTENANCE INSTRUCTIONS		
Section I	General	5-1, 5-2	39
II	D cription and data	5-3, 5-4	39
III	Repair p ts, special tools and equipment	5-5—5-7	39
IV	Troubl hooting	5-8	39
C PTER 6	R PAIR INSTRUCTIONS		
Section I	Service brak	6-1—6-5	40
II	Axle sembly	6-6, 6-7	43
III	Frame embly	6-8, 6-9	44
APPENDIX A	REFERENCES		45
	BASIC ISSUE ITEMS LIST		46
C	MAINTENANCE ALLOCATION CHART		48
D	REPAIR PARTS AND SPECIAL TOOLS LIST		50
Section I	Introduction		50
II	Pr cribed load allowance		53
III	Special tools, test and support equipment for organizational maintenance (not applicable)		None
IV	Rep parts list for organizational mainte nce		76
Group 06	Electrical System		76
	0609 Lights		76
	13 Chassis wiring harn		80
11	R Axle		83
	1108 Stub axl		83
12	rak		84
	1202 Service brak		84
	1204 ydraulic brake system		94
	1208 Air brake system		101

*This I des T 5- 330- 16-15, 1 February 1 5

242-451 1652

		Paragraph	Page
	13. Wheels		108
	1311 Wheel assembly		108
	1313 Tires, tubes		112
	15. Frame, Towing Attachments		112
	1501 Frame assembly		112
	1503 Towing attachments		113
	1507 Leveling jacks		113
	16. Springs and shock absorbers		119
	1601 Springs		119
	1604 Shock absorber equipment		121
	18. Body, Cab, Hood and Hull		122
	1801 Body		122
	22. Accessory Items		123
	2202 Accessory items		123
	2210 Data plates		126
	95. General Use Standardized Parts		126
	9501 Bulk material		126
Section	V. Repair Parts for DS, GS and Depot Maintenance		128
Group 06.	Electrical System		128
	0609 Lights		128
	0613 Chassis wiring harness		132
	11. Rear Axle		136
	1108 Stub axles		136
	12. Brakes		137
	1202 Service brakes		137
	1204 Hydraulic brake system		149
	1208 Air brake system		157
	13. Wheels		165
	1311 Wheel assembly		165
	1313 Tires, tubes		169
	15. Frame, Towing Attachments		170
	1501 Frame assembly		170
	1503 Towing attachments		170
	1507 Leveling jacks		171
	16. Springs and shock absorbers		176
	1601 Springs		176
	1604 Shock absorber equipment		178
	18. Body, Cab, Hood and Hull		179
	1801 Body		179
	22. Accessory Items		181
	2202 Accessory items		181
	2210 Data plates		184
	95. General Use Standardized Parts		185
	9501 Bulk material		185
	VI. Special tools list and support equipment for DS, GS, and depot maintenance (not applicable)		None
	VII. Index—Federal stock number and reference number cross-reference to index number		186
INDEX			194

242-451 1652

C A T 1

T O UCT ON

I. G AL

-. Sc

a. Th e instructions are publ hed for the use of the personnel to whom the trailer is issued. Chapters 1 throu h 4 provide information on the operation, preventive m ntenan rvices, organizational maintenance, storage and demolition of the equipent. Chapters 5 and 6 provide information for direct and eneral support and depot maintenance. This manual also provides characteristic descriptions of the ain and separate co ponents and their relationship and function to each other.

b. Numbe in parenth es on illustrations indicate quantity. Numbers preceding nomenclature callouts on illustrations indicate the preferred maintenance sequence.

1- . r s c rds

a. DA Form 2258 (Depreservation Guide for Vehicles and Equipment)

b. DA Form 1 7 (Proc ing and Depro in Record for Ship ent, Storage, and Issue of Vehicl and Spare Engines).

c. DA Forms and records used for equipment maintenance will be only those pr cribed by TM 38-750, Army Equipment Record Procedures.

Note. Applicable for , excluding Standard Form 46 which is carried by the operator, will be kept in a canvas bag mounted on the equipment.

d. The reporting of errors, omissions, and recommendations for improving this publication by the individual user is encouraged. Reports should be submitted on DA Form 2028 (Recommended Changes to DA Publications) and forwarded direct to the Commanding General, U.S. Army Mobility Equipment Command, ATTN: AMSME-MPP, 4300 Goodfellow Boulevard, St. Louis, Mo 63120.

cti II. D C IPTION AND DATA

1- . G r l

The 2-wheel, drop axle, 2½ ton, trailer chassis (figs. 1-1 and 1-2) is equipped with hydraulic brakes and is suitable for transporting various skid-mounted equipment such as generating sets, lubricating and servicing units, and the like A retractable landing gear is installed in the tongue assembly to provide support for the unit when it is not connected to a prime mover

1-4. Identific tion nd T bul ted D t

a Identification Plate A corps of Engineers plate is mounted on the front bulkhead listing the manufacturer, model, overall dimensions, and capacity of the particular trailer Data from this plate can be found in the following tabulated data

b Tabulated Data

(1)	Manufacturer	Littleford Bro
	Model	251-320
	Contract No	DA 11-184-AMC-221(T).
	Capacity or payload	5,000 lb
	Hydraulic brake system capacity	5/16 qt
(2)	Manufacturer	Henry Spen and Co
	Model	906936-1
	Contract No	DAAK01-67-C-1259
	Capacity or payload	5,000 lb
	Hydraulic brake system capacity	5/16 qt
(3)	Tires	9 00 x 20
	Tire pressure	
	Normal	50 lb
	Sandy or rough terrain	40 lb
(4)	Wiring diagram Refer to figure 1-3	
(5)	Hydraulic brake diagram Refer to figure 1-4	

1-5. Difference in Models

This manual covers trailer chassis as manufactured by Littleford Brothers and Henry Spen and Company with model numbers 251-320 and 906936-1 respectively The existing differences are indicated in the applicable maintenance sections of the manual The major differences between the Spen units and Littleford Brothers units are in the trailer lighting system and fender configuration.

242-451 1652

1 Littleford Bros trailer

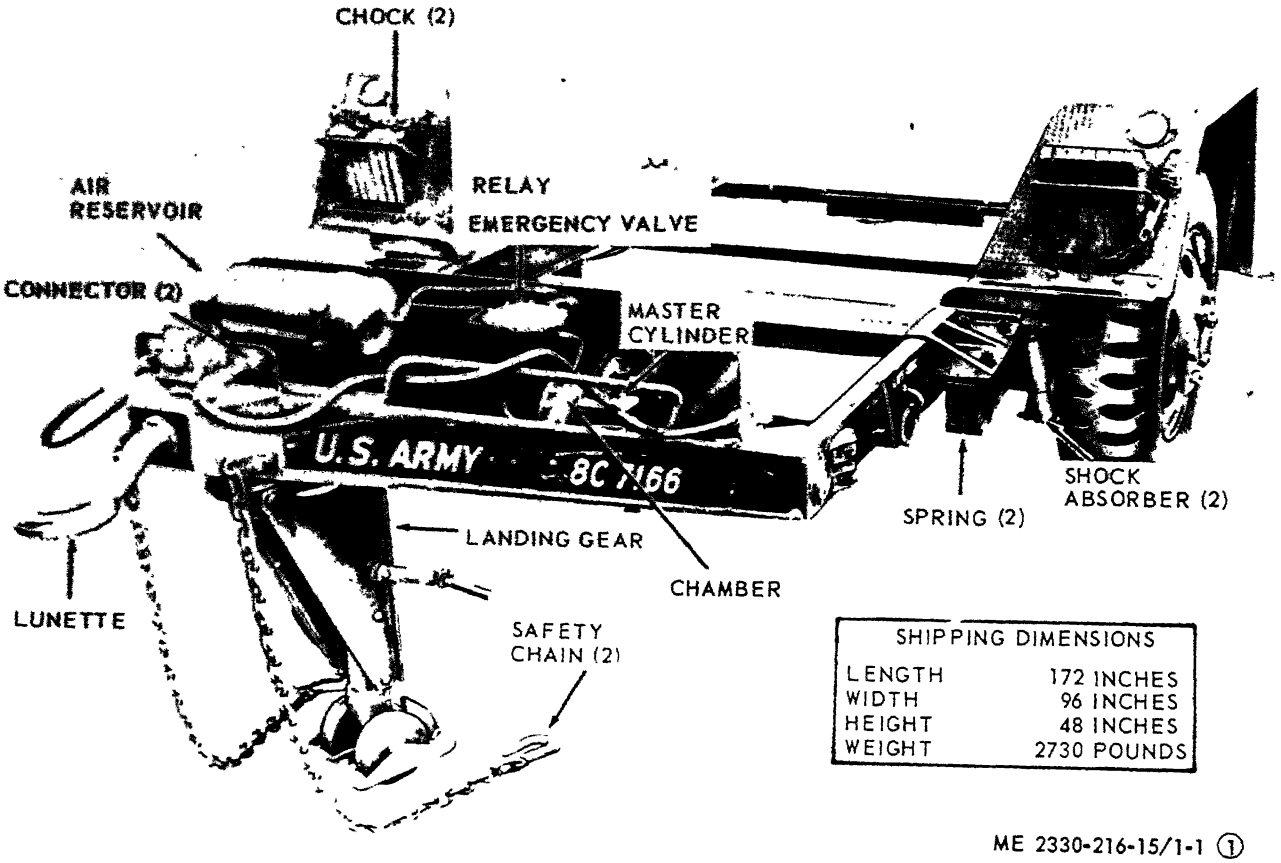

Figure 1-1. Trailer, left front, three-quarter view with shipping dimensions.

242-451 1652

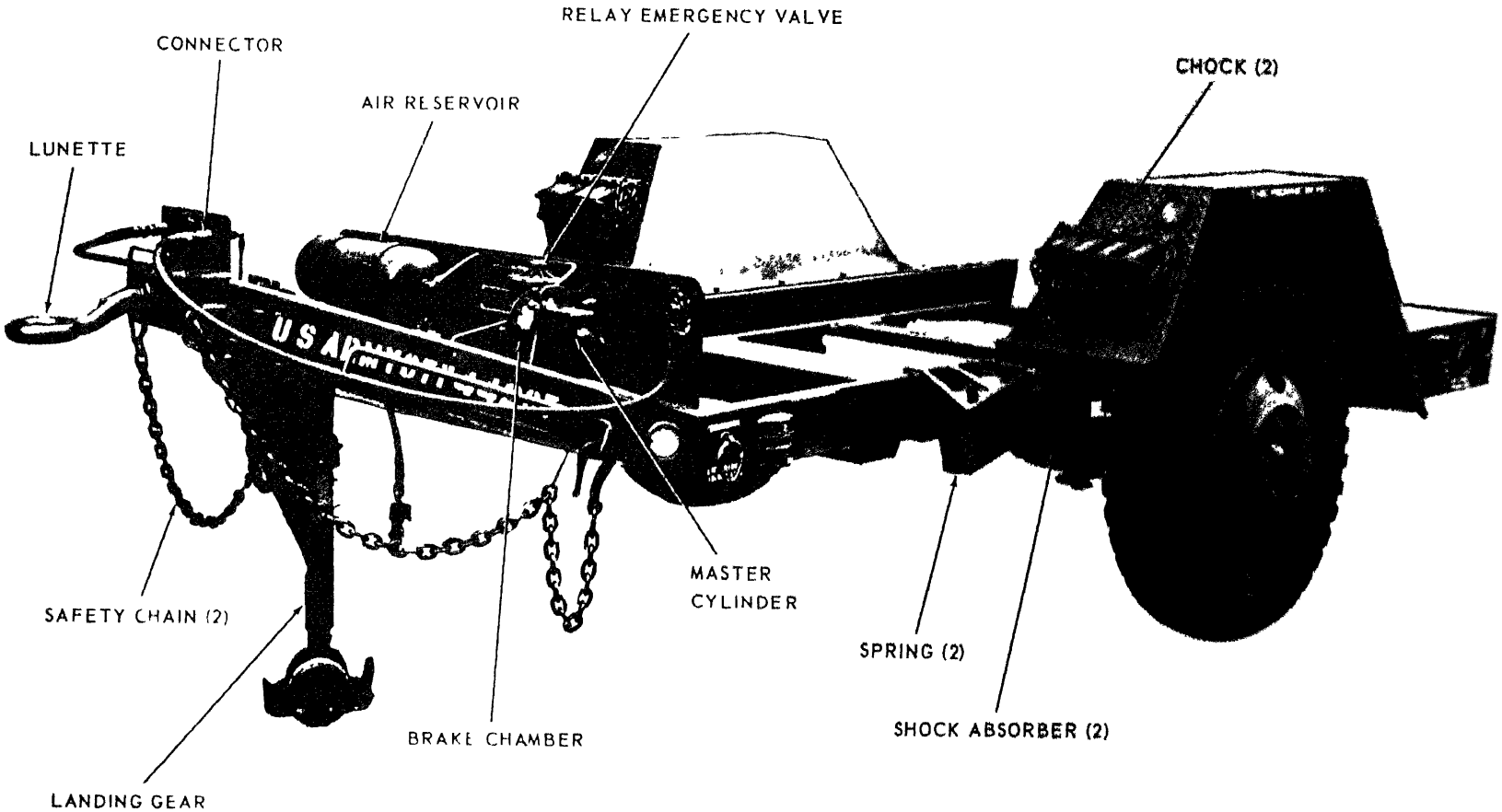

SHIPPING DIMENSIONS		
LENGTH	175	INCHES
WIDTH	96	INCHES
HEIGHT	50	INCHES
WEIGHT	2960	POUNDS

ME 2330-216-15/1-1 (2)

Figure 1-1—Continued.

1 Littleford Bros trailer

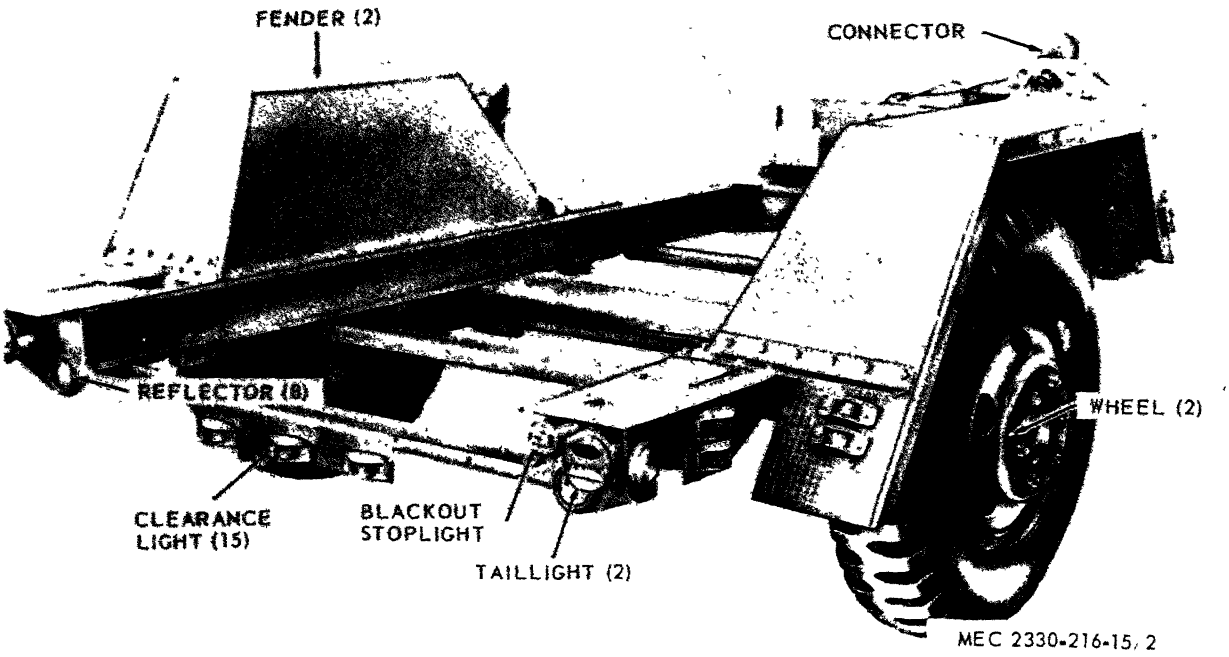

Figure 1-2. Trailer, rear, three-quarter view.

242-451 1652

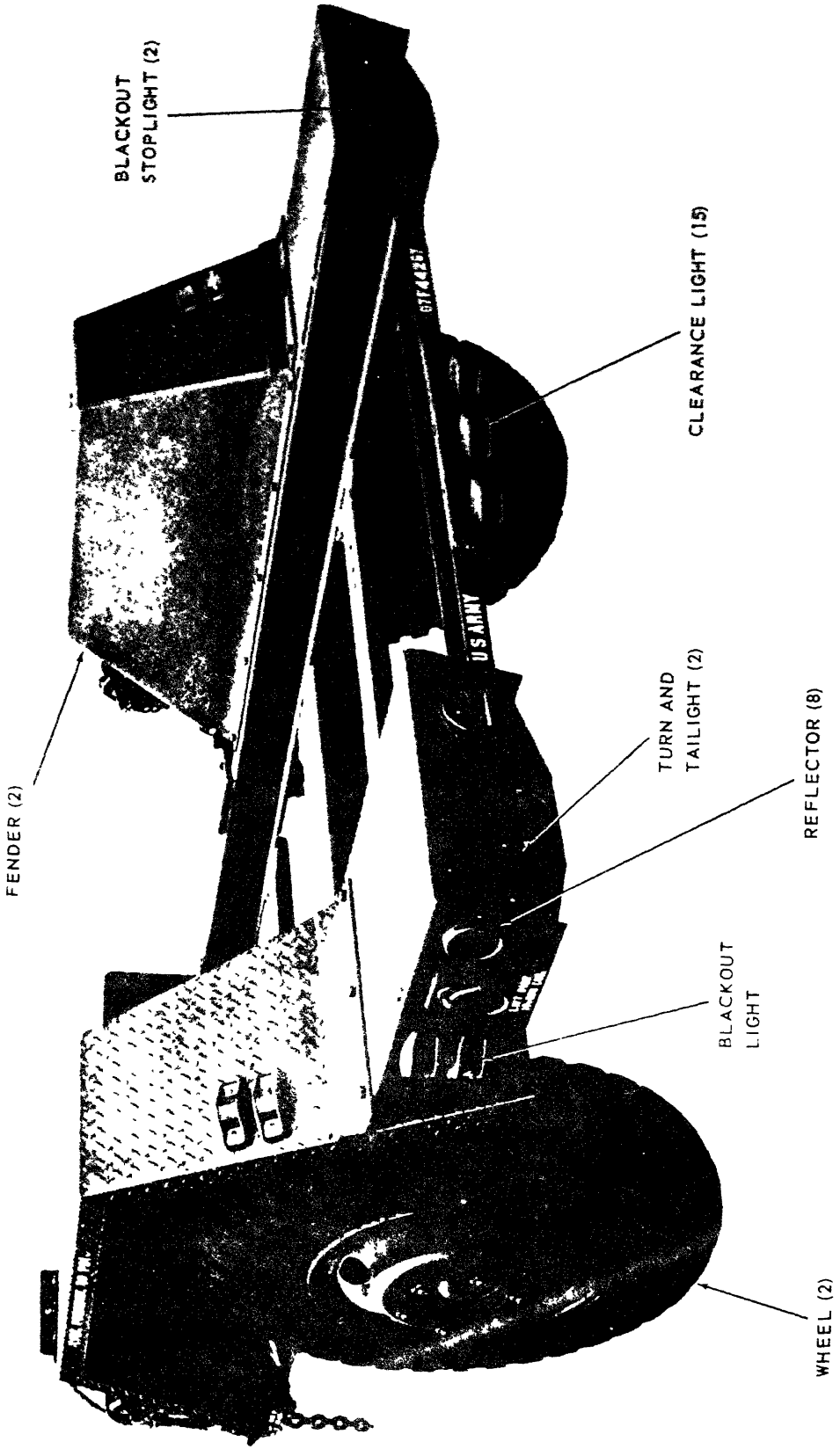

Figure 1-2—Continued

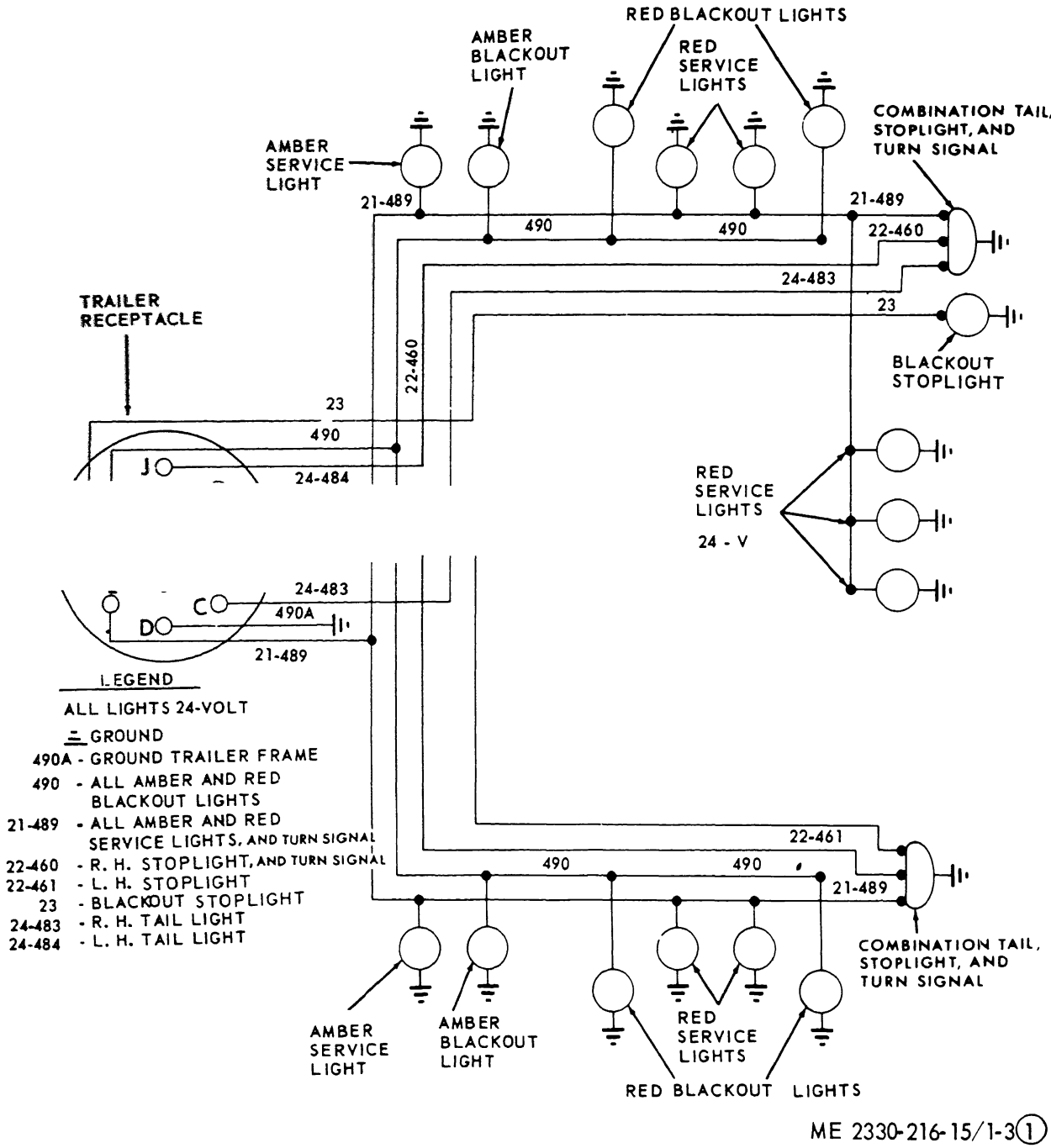

Figure 1-3. Wiring diagram.

242-451 1652

242-451 1652

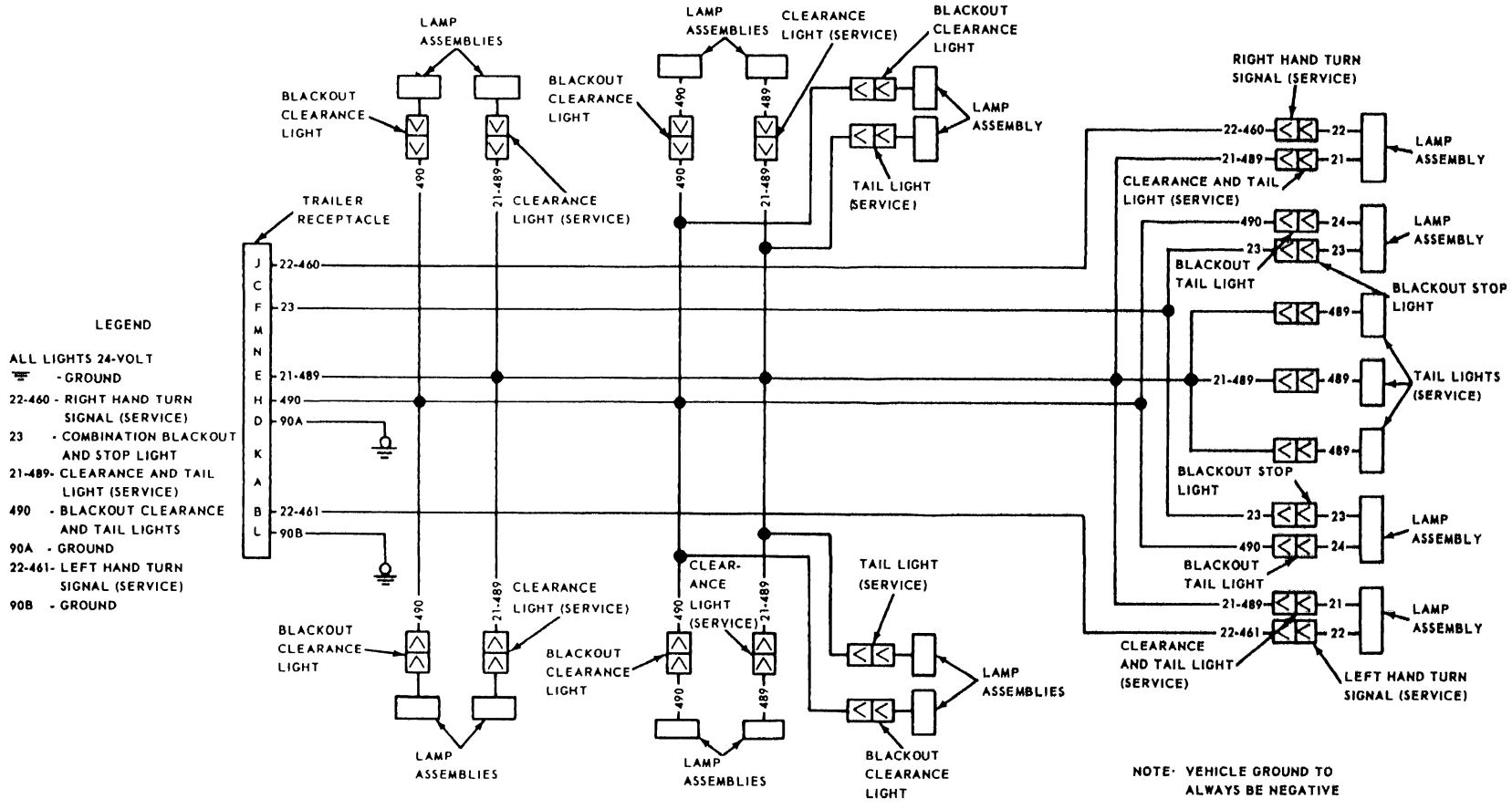

Figure 1-3—Continued.

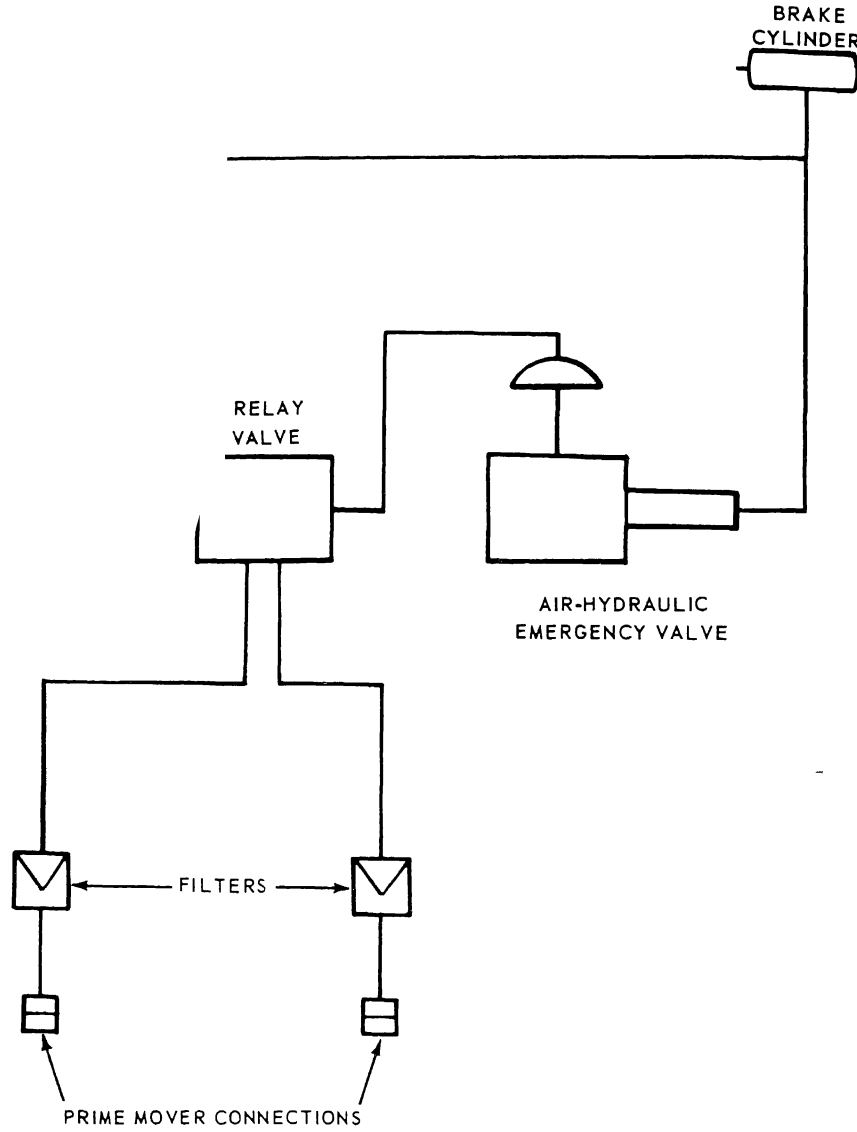

ME 2330-216-15/1-4

Figure 1-4. Hydraulic brake diagram

2-451 1652

CHAPT

O AT NG NST UCT ON

S ti I. VC UPON C PT OF MATE IAL

-1. I s c d S rvici th i t

a. Prepare the trailer for inspection and operation as outlined in DA Form 2258 (Depr ervation Guide of Engineer Equipment) attached to the trailer.

b. Perform the Daily Preventive Maintenance Services (para 3-4).

c. Make a thorough visual inspection of the entire trailer for loose or missin parts and damage which may have occurred durin shipment.

d. Lubricate the trailer in accordance with the current lubrication order.

- . I st ll S r t ly P k d C

The trailer is a self contained unit and has no separately packed components.

- . I st ll ti r Se i U I tr

a. *General*. The trailer is a wheeled vehicle and requires no special settin up instructions except its relation to the prime mover.

b. *Detaching from Pri Mo r*.

(1) Lower the landin e d secure position.

W r i : e e t la i r i i t e do po ti ec e re i ecti t e tr ler fr t e t v cle j y to er el y re lt.

(2) Disconnect the trailer air brak , safety chains, and electrical system.

(3) Disconnect the trailer from the pr e over.

S cti II. MOV M NT TO A N W WO ITE

-4. Pr r ti f r M v nt

a Refer to paragraph 1-4*b*(3) and check the tire pressures for normal and sandy or rough terrain

b Connect the trailer to the prime mover

c Retract the landing gear and secure in position

d Connect the trailer brakes, safety chains, and electrical systems Check the condition of the systems for proper operation

2-5. i st ll ti n Aft r M v t

Refer to paragraph 2-3 for installation instructions after movement

Section III. CONT OLS AND INST UM NTS

2-6. Controls nd Instru ents

The trailer's brakes and lights are operated from the towing vehicle and therefore air pressure and electrical information pertaining to the trailer will be the same as the towing vehicles

Section IV. OPERATION OF EQUIPM NT

2-7. Gener l

a The instructions in this section are published for the information and guidance of personnel responsible for the operation of the trailer

b The trailer can be used to transport various items of skid-mounted equipment such as generators, lubricating and servicing units and other similar equipment

- . Tr iler O er ti n

Refer to figure 2-1 for trailer operating instructions

-9. O er ti n in xtr e C ld (° F.)

a *Electrical System* Do not disturb electrical leads or wiring because cold insulation is brittle and tends to crack easily

b *Reservoir* Drain accumulated moisture from reservoir

-10. Oper ti n in S ndy Ar s

Check tire pressures (para 1-4*b*(3)) for operation in sandy or rough terrain

-11. O r ti n i Salt W t r Ar s

Wash the trailer frequently with clean fr h water to prevent the formation of rust and corrosion. Coat exposed non-painted surfaces with a light coat of grease or rust inhibitor.

242 451 1652

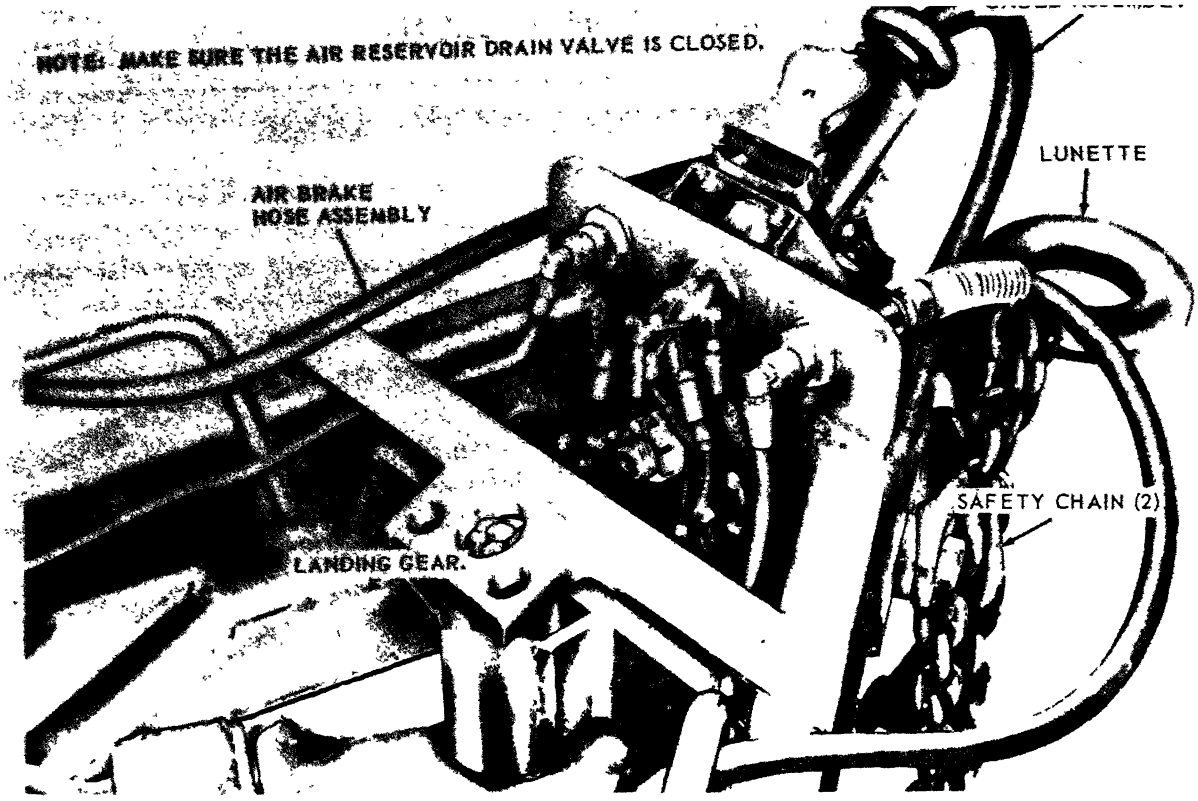

STEP 1. CONNECT THE LUNETTE TO THE PINTLE OF THE PRIME MOVER.
STEP 2. CONNECT THE AIR BRAKE HOSE ASSEMBLY AND ELECTRICAL CABLE ASSEMBLY TO THE PRIME MOVER.
STEP 3. CONNECT THE SAFETY CHAINS TO THE PRIME MOVER.
STEP 4. RETRACT THE LANDING GEAR AND SECURE IN POSITION AND TOW THE TRAILER.

MEC 2330-216-15 '4

Figure 2-1. Trailer operating instructions.

242-451 1652

CHAPT

OP ATO 'S AND O GAN ZAT ONAL MA NT NANC INST UCT ONS

Se · I. OP ATO AN O GANIZATIONAL MAINT NANC PAI PA T , TOOL AN QUIPM NT

-1. T ls i t

a. B ic issue tools and repair parts i ued with or authorized for the trailer are listed in the b ic issue items list, appendix B of this manual.

b. No special tools and equipment are required to perform operator and organi tional maintenance on the trailer.

- . Or iz ti I M i t ir

Organizational maintenance repair parts are listed and illustrated in appendix D of this manual.

cti II. P VENTIVE MAINTENANC CH C S AND S VIC

- . G r l

To insure that the trailer is ready for operation at all tim , it must be inspected systematically so that defects may be discovered and corrected before they r ult in serious dama e or failure. Defects discovered during operation of the unit will be noted for furture correction, to be made as soon as operation has ceased. Stop operation immediately if a deficiency is noted during operation which would damage the equipment if operation were continued. All deficencies and shortcomings will be recorded together with the corrective action taken on DA Form 2404 (Equipment Inspection and Maintenance Worksheet) at the earliest possible opportunity.

3-4. Pr v tiv M i t C ks S rvi s

Table 3-1 contains a tabulated list of preventive maintenance checks and services which must be performed by the operator and organizational maintenance personnel. Item numbers indicate the sequence of minimum inspection requirements and the interval column designates the maintenance level and required service interval. A quarterly interval is equal to 3 calendar months or 250 hours of operation, whichever occurs first

Table 3-1 Preventive Maintenance Checks and Services

B—Before Operation D—During Operation A—After Operation W—Weekly M—Monthly Q—Quarterly

Item Number	Interval: Operator Daily B	Operator Daily D	Operator Daily A	Operator Daily W	Org M	Org Q	Item to be Inspected	Procedure	Reference
1	X	----	----	----	----	----	Tires	Check for proper inflation	Para 3-10
2	X	----	X	----	----	----	Air Brake Reservoir	Drain moisture from tank Inspect for leaks and loose mounting	Para 3-9
3	X	----	X	----	----	----	Lights	Check for proper operation and defective wiring	Para 3-6
4	X	----	----	----	----	----	Master Cylinder and Brake Air Chamber	Check for proper operation, leaks, loose fittings and secure mountings	Para 3-8

S cti III. OP ATO 'S MAINT NANC

- . G r l

Instructions in this section are for the operator's information and guidance in maintenance of the trailer.

3-6. Cl r c Li d t Li

a. Test lamps by operating switch and brake pedal in towing vehicle. Make certain that intervehicular harness is connected.

242-451 1652

b. Refer to figures 3-9, 3-10, 3-11 and 3-12 and replace any lamps that do not light.

3-7. Wheel Bearings

Refer to current lubrication order and service the wheel bearings.

3-8. Master cylinder

Refer to current lubrication order and service the cylinder. Check for leaks, loose fittings, and secure mountings.

3-9. Air Brake Filter and Air Brade Reservoir, Servicing

Refer to figure 3-1 and service the air brake reservoir and brake air filter.

3-10. Tires, Tubes, Servicing

Refer to paragraph 1-4*b*(3) for normal and sandy or rough terrain pressures.

3-11. Landing Gear, Servicing

a. Clean all parts with an approved cleaning solvent.

b. Refer to current lubrication order and service landing gear.

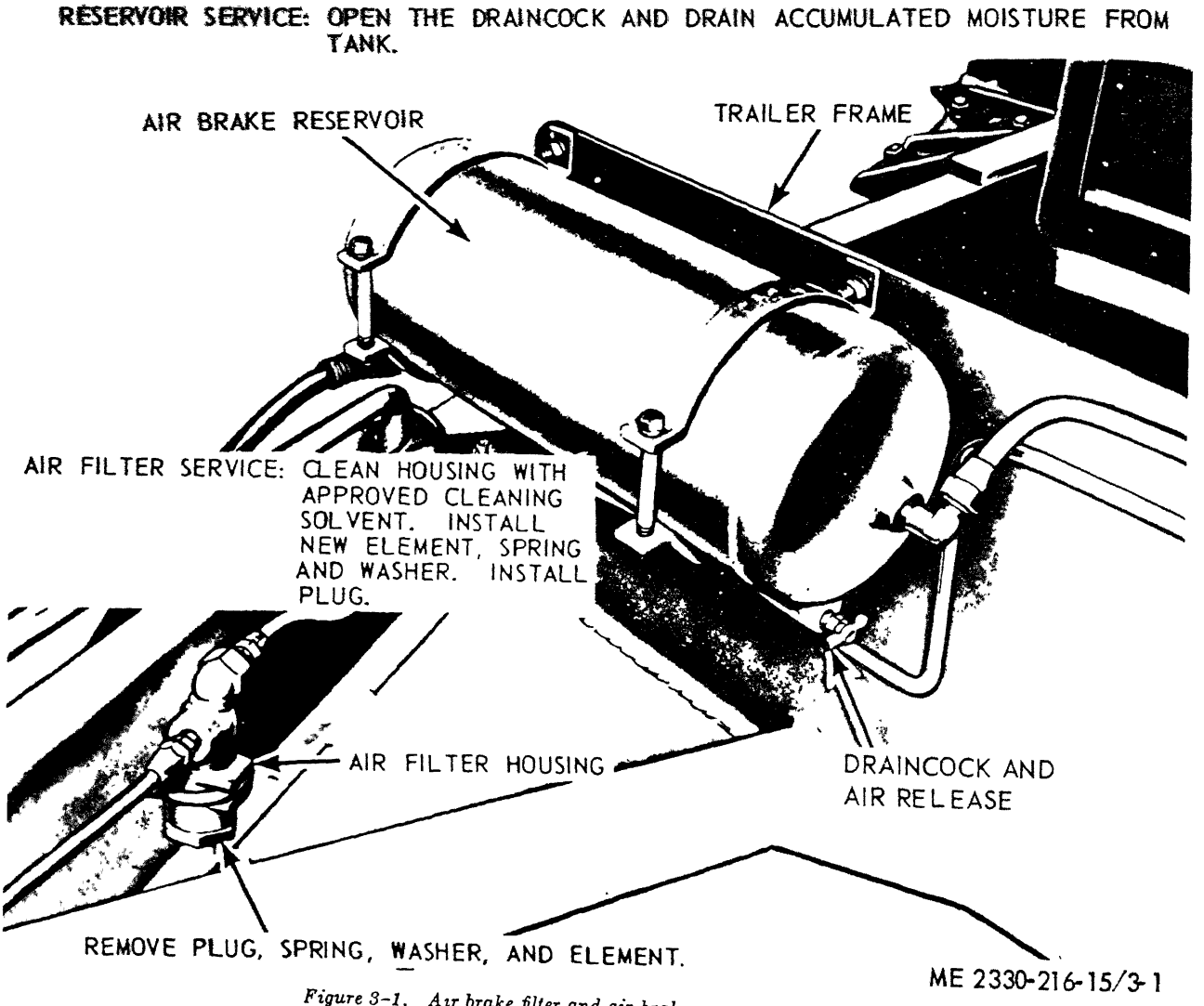

Figure 3-1. Air brake filter and air brake reservoir, servicing.

242-451 1652

Se IV. TROU L HOOT

-1 . G r l

This s tion provid infor ation useful in diagnosin and co tin u at factory op ation or failure of the trailer and its co ponents. Malf c-tions which ay occur e listed table 3- . E h alfunction st ted is followed by a list of prob ble ca of the trouble. The corr tive tion reco - ended is d c bed opposite the probable cause. Any trouble beyond the scope of or nizational tenan shall be ported to dir t support t n .

Table 3- . Troubleshooti

alfu	Pr	Corr
1. Wheel hub throws e e	a. I p per be lubri nt	a. Refer to current lubrication ord .
	b. Loose or cracked hub p	b. Ti hten or pla hub p.
	c. Da ged or wo e als in hub	c. Repla als (p a 3-16).
	d. Defective ket in hub	d. Repla gasket (p a 3-16).
2. Wheel be s overheat	a. Lack of wheel be ing lubricant	a. Lubri te wh l bearings ac rdance with current lubrication order.
	b. Wheel bearin i properly adjusted	b. Adjust bearin (p a 3-16).
3. Wh ls wobble	a. Wheel l on hub	a. Tighten ountin nuts.
	b. Wheel da aged or bent	b. Repla wheel (p a 3-14).
	c. Wh l be out of adj t ent or defective.	c. Adjust or replace be in (para 3-16).
4. T we unevenly or ex- c sively.	a. Wh ls loo	a. Tighten ounting nuts.
	b. Tires not ated to p per pr e	b. In ate tires to proper pre ure (para 1-4b(3)).
5. Trailer brakes inoperative	a. rake air cha ber defective	a. Replace brake air cha ber (p a 3-20).
	b. rake valve defective	b. Replace brake valve (para 3-21).
	c M ter cylinder defective	c. Replace m ter cylinder (p a 3-19).
	d Air in hydraulic lin	d. Bleed lines (p a 3-18b).
	e rake linings worn or gre e soaked	e Refer to Direct Support Maintenance.
6 Brakes noisy	a rake linings dirty, worn or oil soaked	a Refer to Direct Support Maintenance
	b Brake drum out of round	b Replace brake drum (para 3-16)
7 rakes grab	a Brakes improperly adjusted	a Adjust brakes (para 3-18a).
	b Brake valve faulty	b Replace valve (para 3-21).
8 Brakes overheat	a Brake shoe rele springs loose or broken	a Replace springs (para 3-16)
	b Brakes improperly adjusted	b Adjust brakes (para 3-18a)

S ti V. WH LS, TI S, AND TU S

3-1 . Ge r l

Each wheel is supported by two tapered roller bearings A seal and hub cap protect the wheel bearings from dirt and foreign matter and retain the lubricant The shock absorbers are two-way control, double-acting, hydraulic-cylinder units

-14. W ls

a Clean all metal parts with an approved cleaning solvent and dry thoroughly.

b Refer to figure 3-2 and remove and install the wheels

-1 . Tir s T b s

a Remove wheels (fi . 3-2)

b Refer to TM 9-1870-1 to remove or install the tires and tubes

c Inspect tires and tubes for cuts, cracks, breaks and other damage

d Replace a damaged or defective tire and tube

e Refer to paragraph 1-4b(3) and inflate tires

-16. W l ri s, Gr s ls d G sk , Hub, r Dru , d r k S ri s

a. Refer to figure 3-2 and remove and install wheels.

b Refer to figure 3-3 and 3-4 and remove and install wheel bearings, gre e seals, kets, hub, brake drum and springs.

242-451 1652

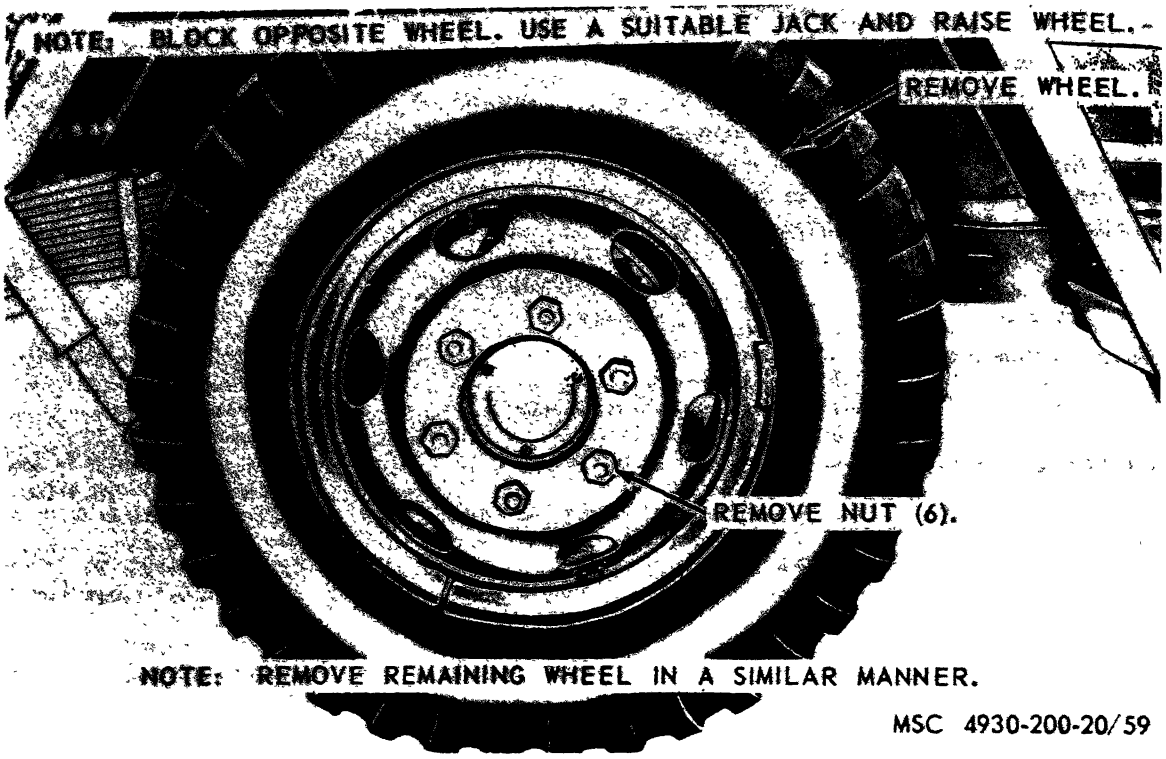

Figure 3-2. Wheels, removal and installation.

242-451 1652

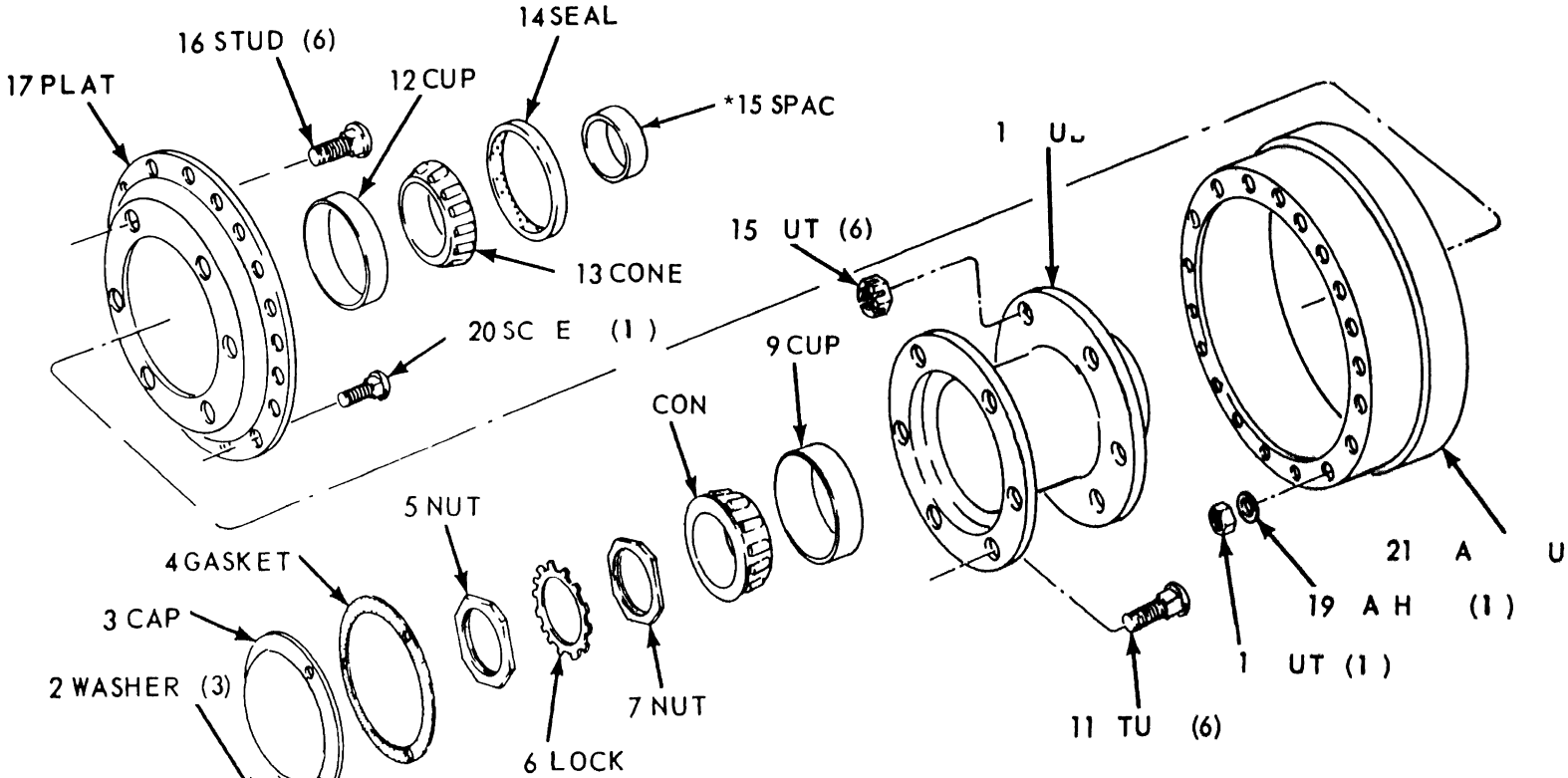

NOTE: TIGHTEN NUT (7) U TIL HU
INDS ON AXL SPI L , TH
ACK OFF UT ON - IGHT
TU N.

* ONLY HE Y SP N T AIL HAS THIS PA T

E 2330-216-15/3-3

Figure 3-3 Wheel bearings, grease seals and gaskets, hub, and brake dru , d' ass bly and reass bly.

242-451 1652

1 Wheel cylinder, removal and installation

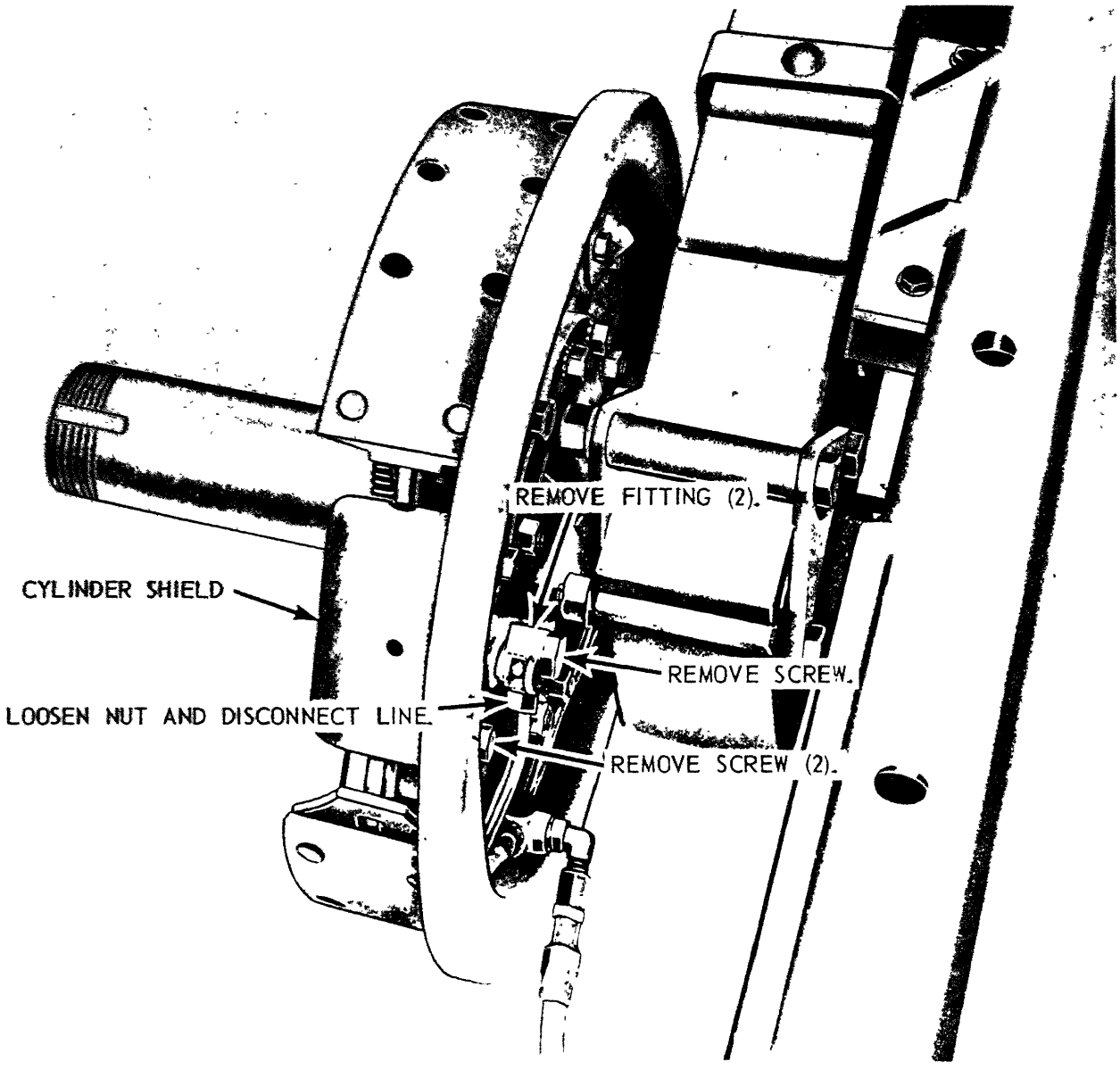

ME 2330-216-15 3-4 (1)

Figure 3-4 Wheel cylinders, brake shoe and springs, removal and installation.

242-451 1652

2 Brake shoes, springs, removal and installation

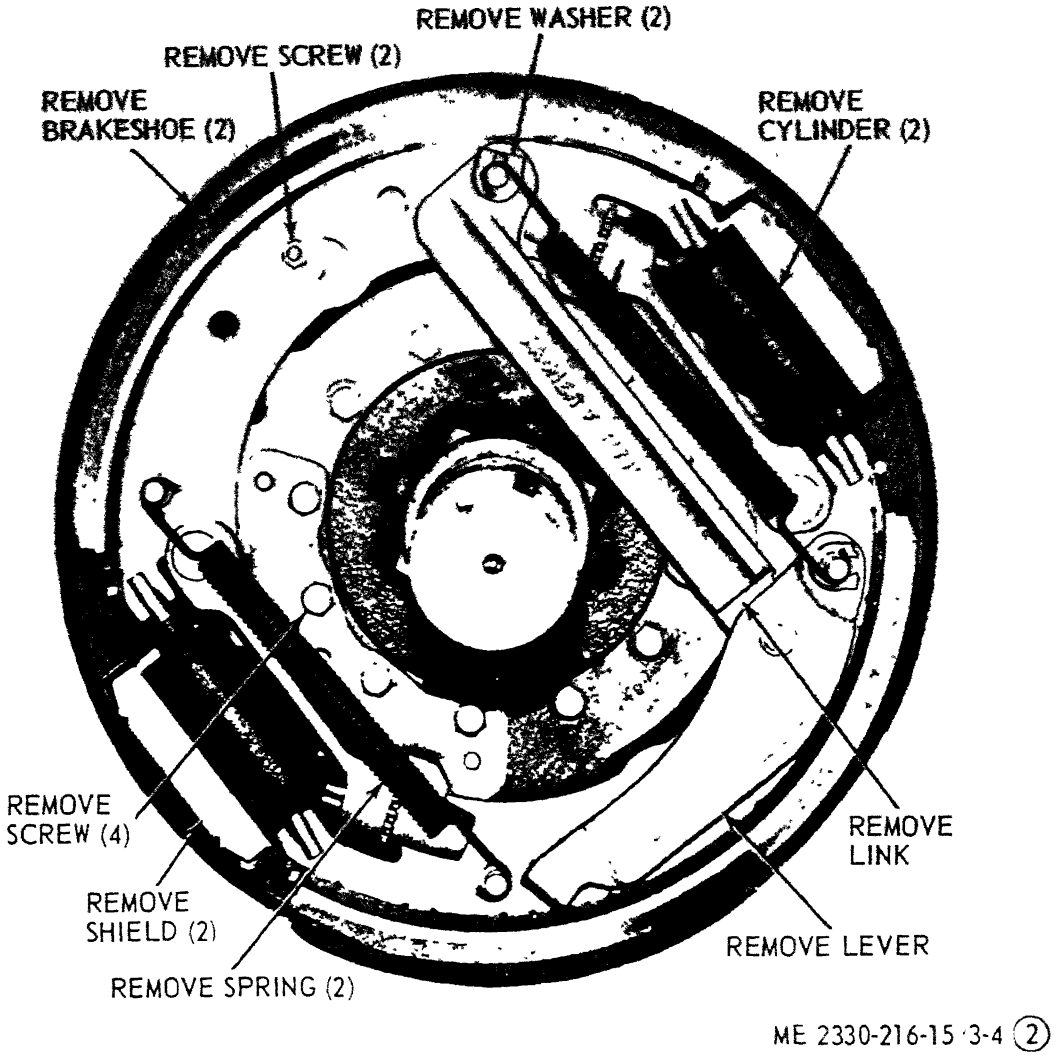

Figure 3-4—Continued.

Section VI. SERVICE AKES

-17. G ner l

'he service brakes are of the type known as "air over ydraulic" Air pressure is used to operate the hyraulic braking mechanisms, applying the brakes ith pressure in ratio to the foot pressure applied to ie brake pedal of the towing vehicle The trailer serice brakes consist of intervehicular air hoses, air lters, relay-emergency valve, air pressure tank, rake air chamber, master cylinder, wheel cylinders, ydraulic lines and fittings, and air lines and fittings 'ach wheel brake shoe is anchored loosely to the ack plate, on which it is allowed to expand and conact without binding Hydraulic wheel cylinders iounted at the top and bottom actuate the shoes uring braking operation

3-1 . Service r kes nd Hydr ulic Wheel Cylinders

a .Adjustment

(1) Release air pressure by opening draincock on air reservoir (fig 3-1)

(2) Jack the trailer and block it so the wheels can be turned by hand

(3) Turn the lower adjusting stud (fig. 3-5) counterclockwise until brake linings contact brakedrum with slight drag when drum is rotated by hand Then turn stud clockwise to allow drum to rotate freely.

(4) Adjust the top adjusting stud in a similar manner.

(5) Adjust remaining wheel in a similar manner.

242-451 1652

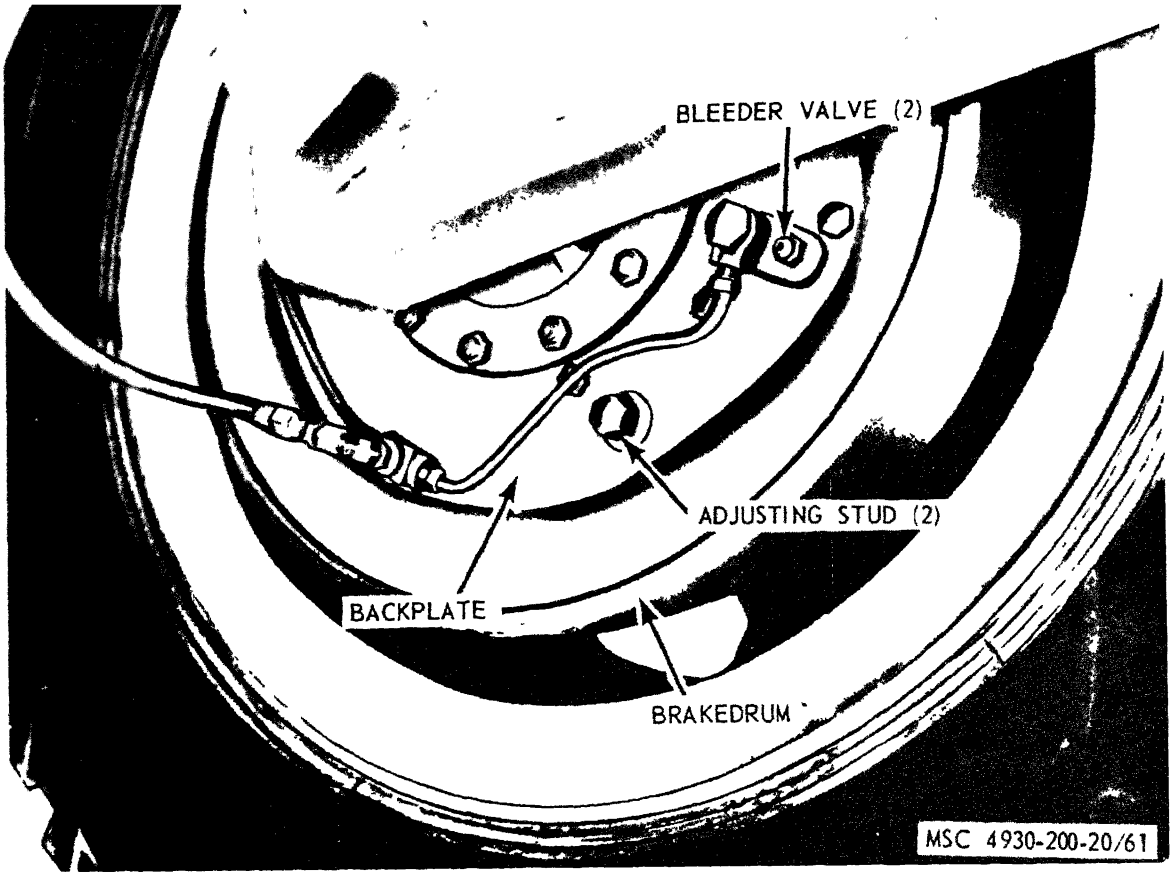

Figure 3-5. Service brake adjustment and bleeding.

b Bleeding

1 *General* It is necessary to bleed air from the hydraulic portion of service brakes if the system is opened or a component of the system has been replaced

2 *Manual bleeding.*

a Connect trailer service brake hoses to a towing vehicle for manual bleeding as the brake pedal must be pressed and released to actuate the system The master cylinder must be kept full of brake fluid or air will enter the system.

b Clean the bleeder valve with a clean cloth Attach a tube to the bleeder valve and place the other end of the tube in a suitable container.

c Fill the master cylinder with brake fluid. Refer to the current lubrication order.

d Pump brake pedal on towing vehicle until pressure is applied. Hold pedal pressure and open bleeder valve (fig 3-5) until pressure is released on pedal, then close valve.

e Repeat action until fluid has replaced air in the system, then close the valve and remove the hose.

(*f*) Refill master cylinder with brake fluid and install filler cap.

(*g*) Repeat the above operation on the other wheel cylinders

***Caution:* Maintain a high level of fluid in the master cylinder while bleeding each wheel cylinder.**

(3) *Pressure feed filler bleeding*

(*a*) Remove the filler cap from the master cylinder

(*b*) Connect the hose to pressure feed filler, with the proper size adapter, to the opening of the master cylinder.

(*c*) The filler should contain from 10 to 20 psi air pressure and sufficient fluid to maintain constant fluid level in the master cylinder.

(*d*) Bleed the system as in manual bleeding ((2) above).

(*e*) Replenish the fluid in the master cylinder after bleeding, if necessary. Refer to the current lubrication order.

c. Hydraulic Wheel Cylinders, Removal and Installation.

242-451 1652

(1) Remove and install wheel, hub and brake drum (fig. 3–2 and fig. 3–3).

(2) Refer to figure 3–4 and remove and install the brake shoes.

(3) Refer to figure 3–4 and remove and install wheel cylinders.

3–19. Hydr ulic M ster Cyli der, Lines, nd Fi in s

Refer to figure 3–6 and remove and install the hydraulic master cylinder, lines and fittings.

3– 0. r k Air C b r

a. Removal and Installation. Refer to figure 3–6 and remove and install the brake air chamber.

b Disassembly and Reassembly. Refer to figure 3–7 and disassemble and reassemble the brake air chamber.

3–21. r k V lve

Refer to figure 3–6 and remove and install the brake valve.

3– . Air R s rv ir

Refer to figure 3–8 and remove and install the air reservoir.

– . Air Filt rs

Refer to figure 3–8 and remove and install the air filters.

1 Littleford Bros trailer

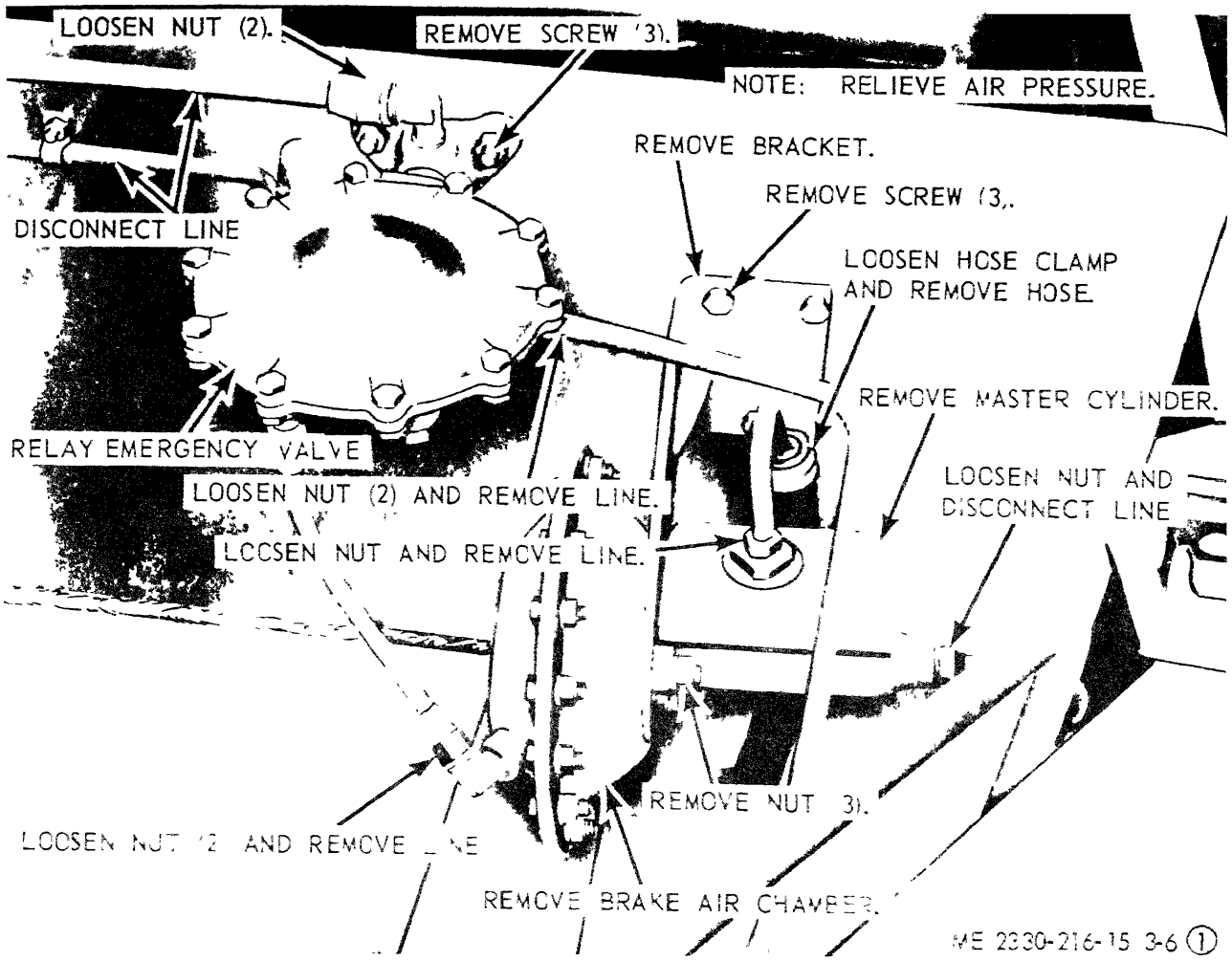

Figure 3–6 Hydraulic master cylinder, lines, fittings, brake air chamber, and relay valve—removal and installation

242-451 1652

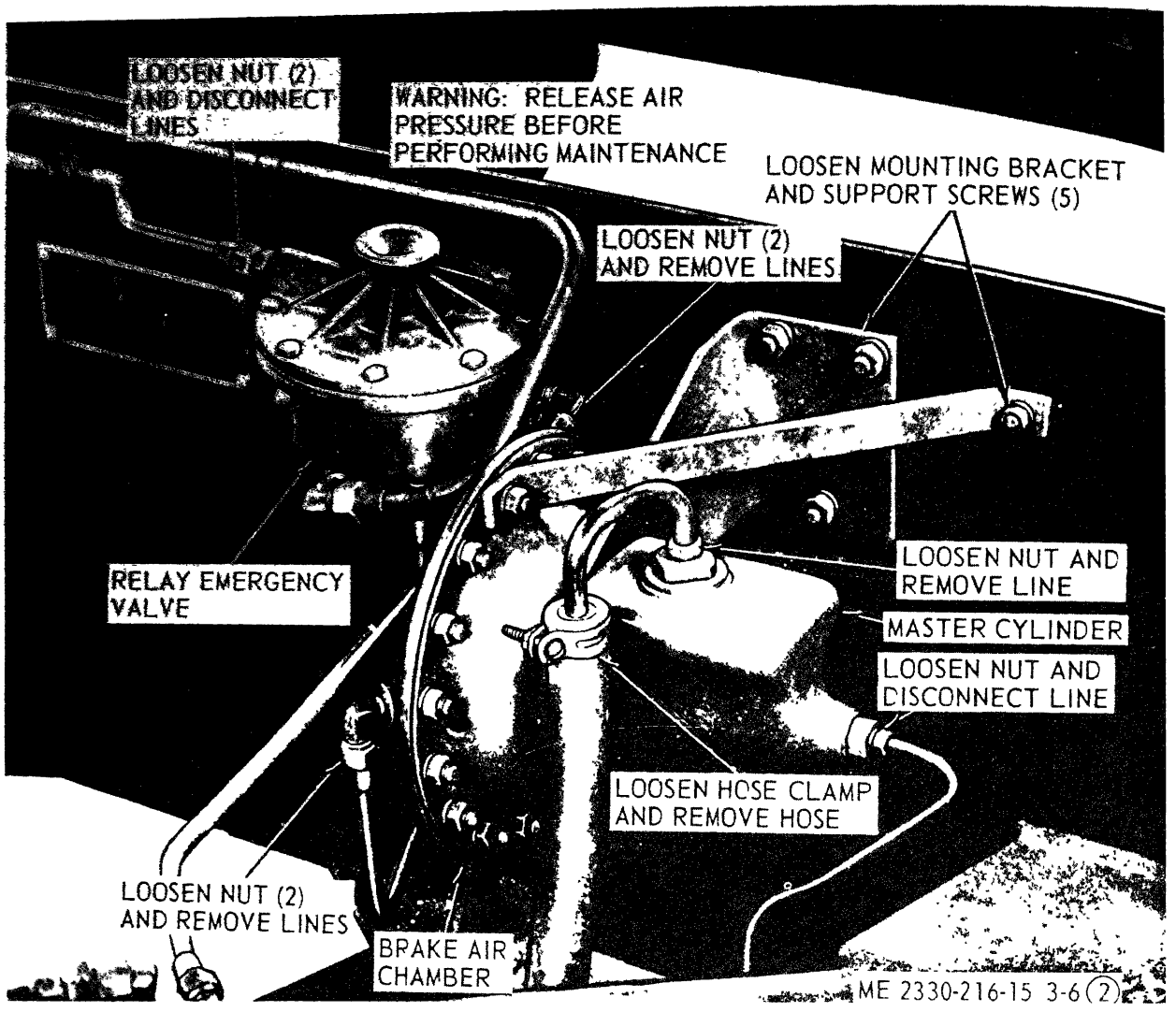

Figure 3-6—Continued.

242-451 1652

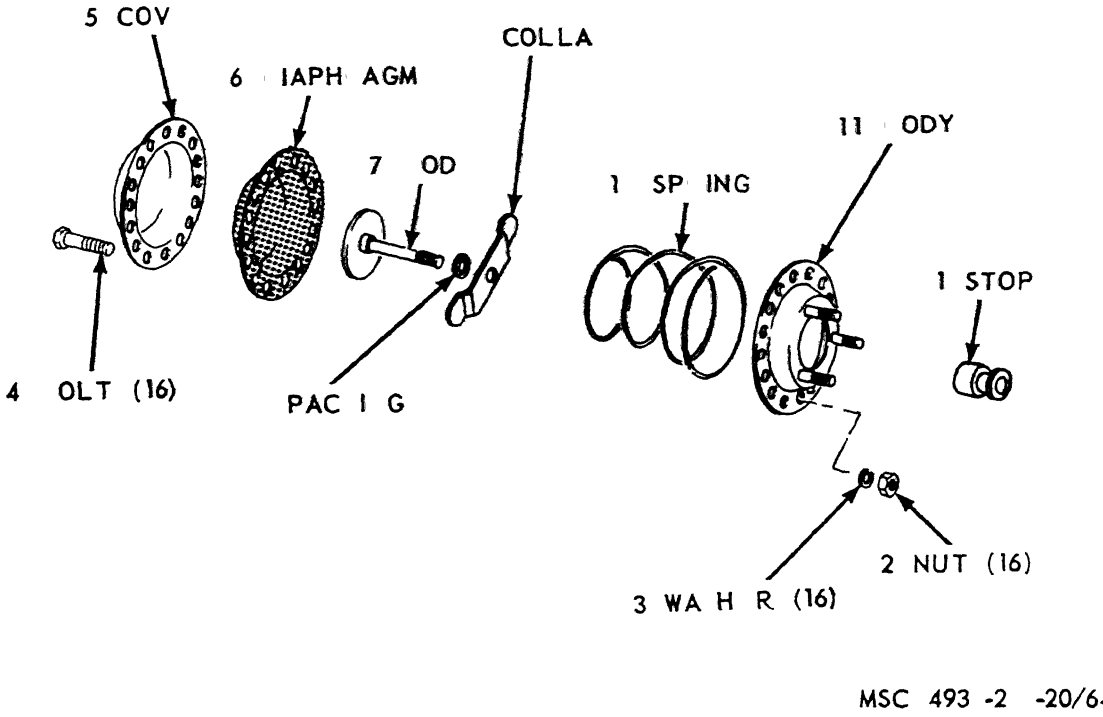

Figure 3-7 Brake air chamber, dis s bly and re s bly.

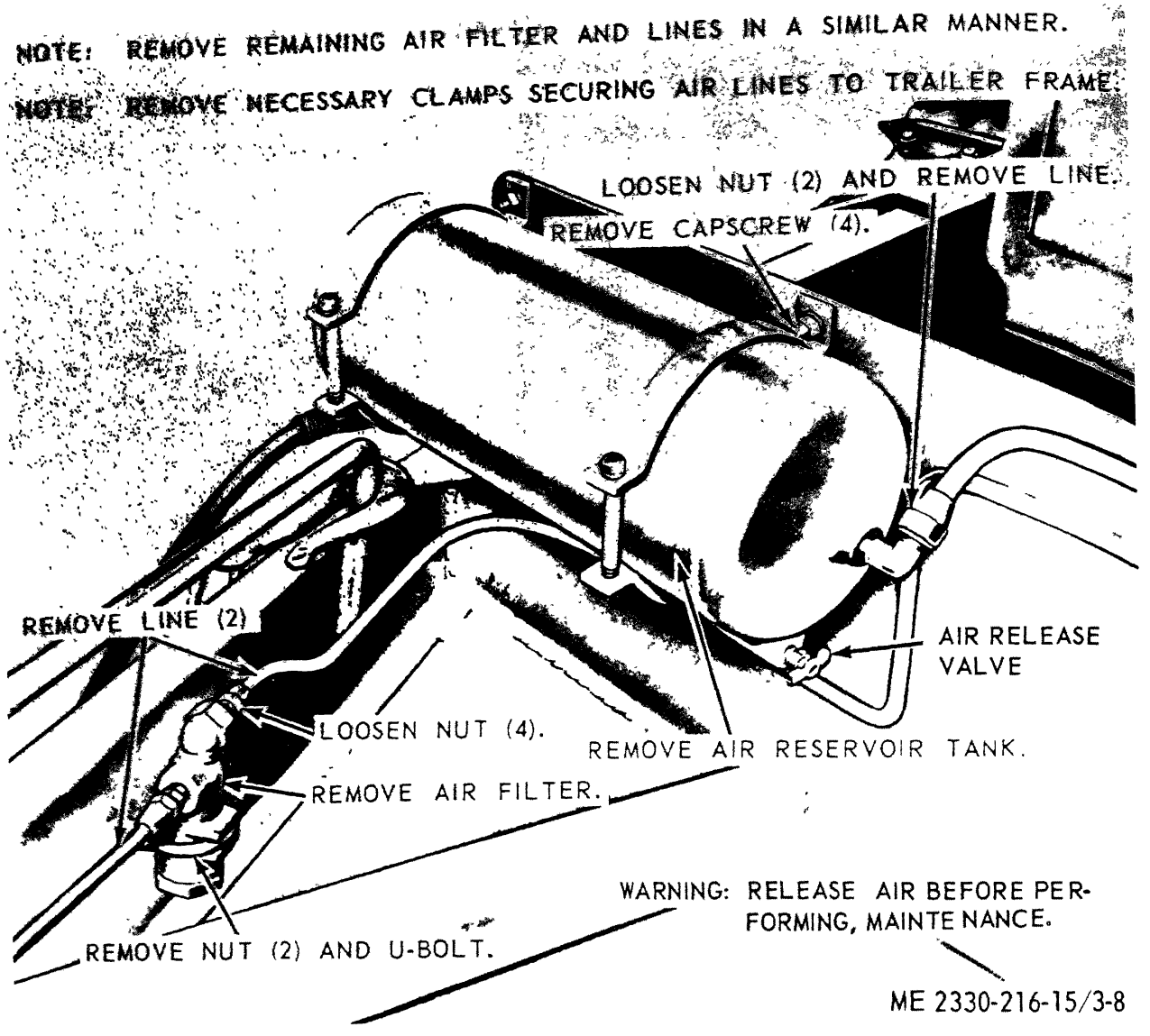

Figure 3-8 Air reservoir and air filter, removal and installation

Section VII. TRAILER ELECTRICAL SYSTEM

3-24. General

The trailer electrical system consists of the clearance lights, taillights, blackout stoplight and wiring harness. This section contains information on the maintenance of these items.

3-25. Trailer Clearance Lights and Lamps

a. Removal and Installation. Refer to figure 3-9 and remove and install the trailer clearance lights and lamps.

b. Disassembly and Reassembly. Refer to figure 3-10 and disassemble and reassemble the trailer clearance lights.

3-26. Taillights, Lamps, and Wiring Harness

a. Removal and Installation. Refer to figure 3-11 and remove and install the taillights, lamps, and wiring harness.

b. Disassembly and Reassembly. Refer to figure 3-12 and disassemble and reassemble the taillights.

242-451 1652

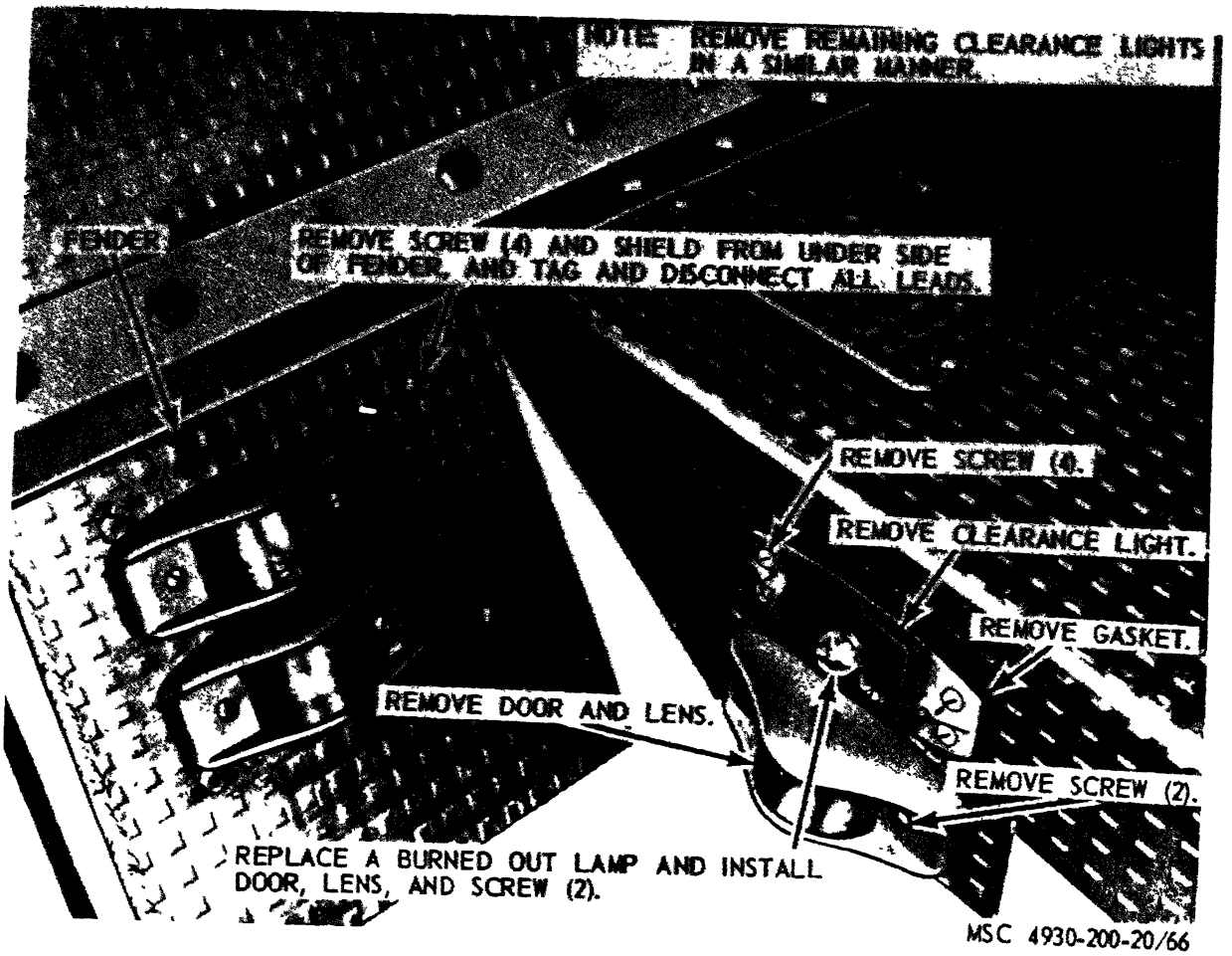

Figure 3-9 Trailer clearance lights and lamps, removal and installation

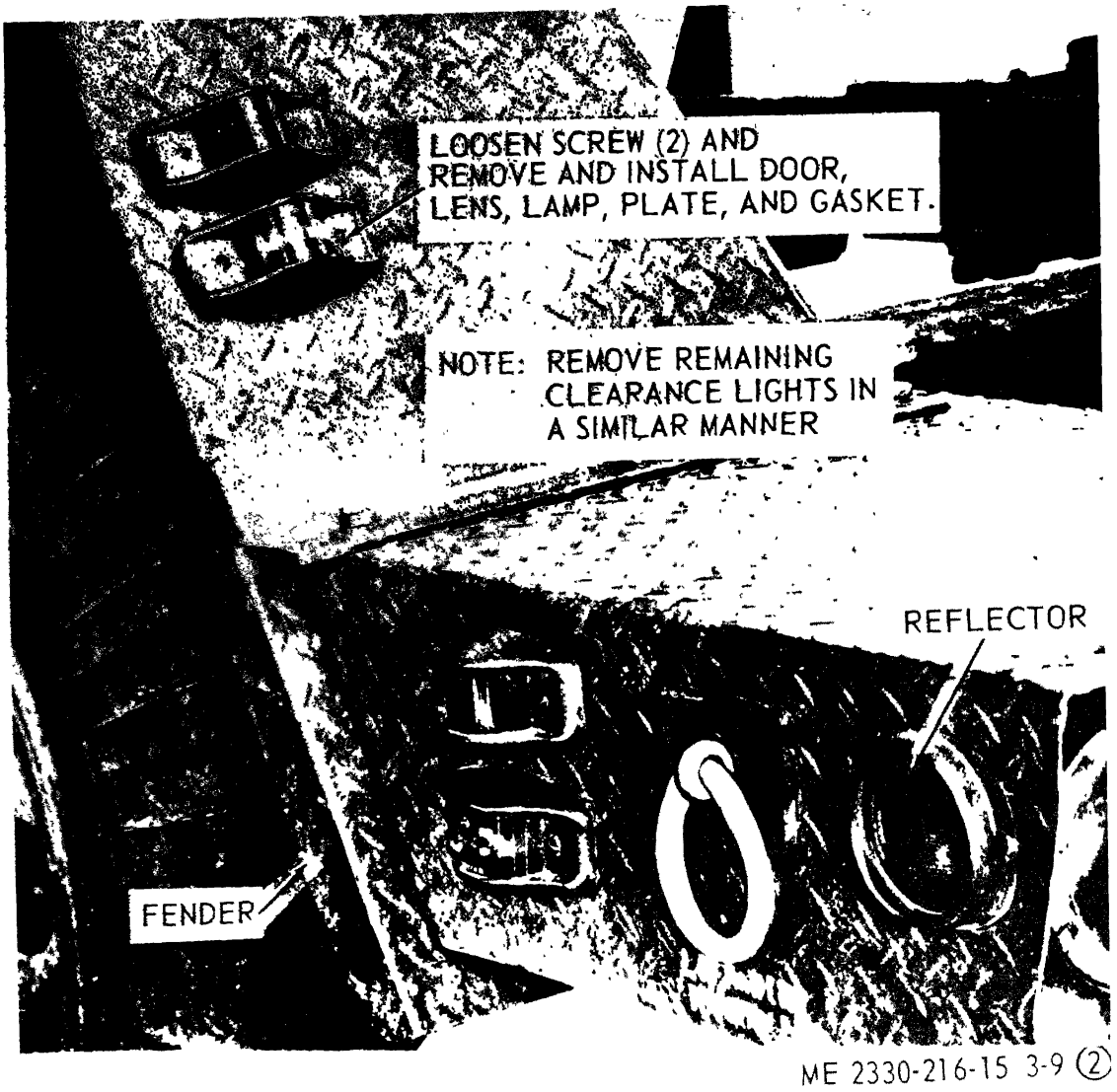

Figure 3-9—Continued.

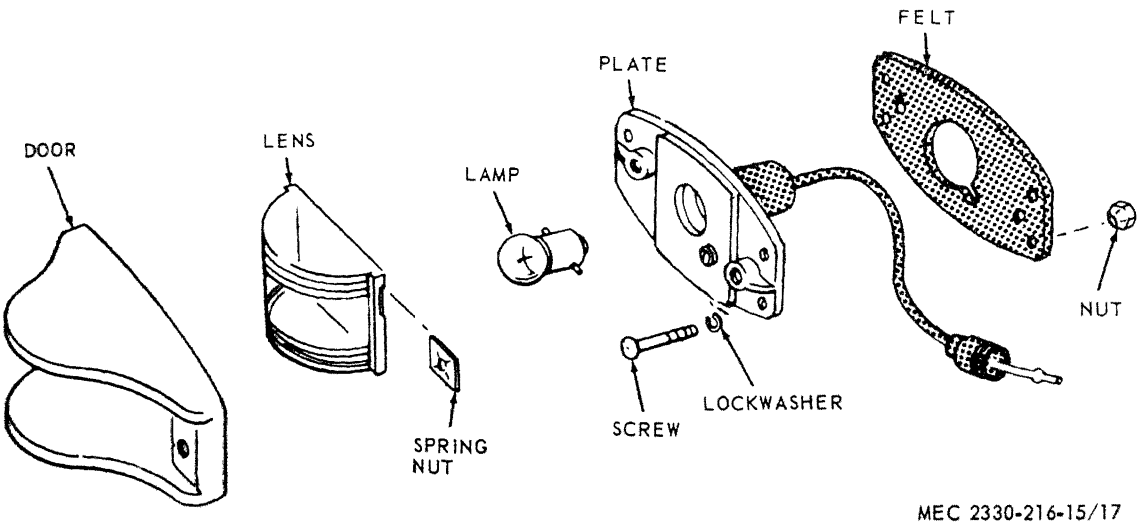

Figure 3-10. Trailer clearance lights, disassembly and reassembly.

242-451 1652

1 Front view

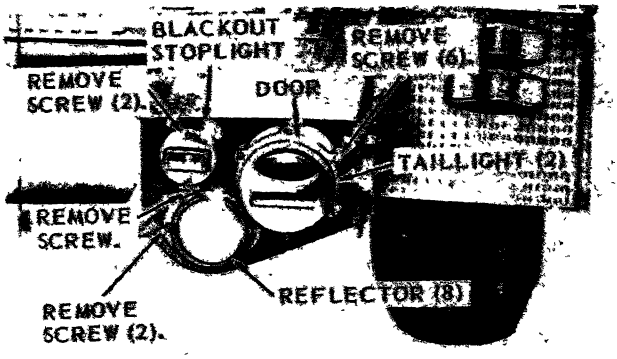

A. LITTLEFORD BROS TRAILER

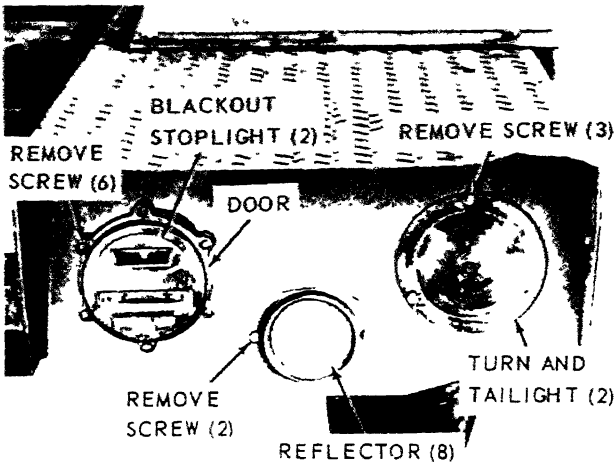

B. HENRY SPEN TRAILER

NOTE TAG AND DISCONNECT ELECTRICAL LEADS AS NECESSARY.

REMOVE OTHER REFLECTORS AND LIGHTS IN A SIMILAR MANNER.

LAMP REPLACEMENT

STEP 1. REMOVE DOOR SCREWS.

STEP 2. REMOVE DOOR, GASKET, AND DARK OR BURNED OUT LAMPS

STEP 3. REPLACE LAMPS, DOOR, AND GASKET, AND SECURE WITH MOUNTING SCREWS.

ME 2230-216-15/3-11①

Figure 3-11 Reflectors, blackout stoplight, taillights, lamps, and wiring harness, removal and installation

2 Rear view

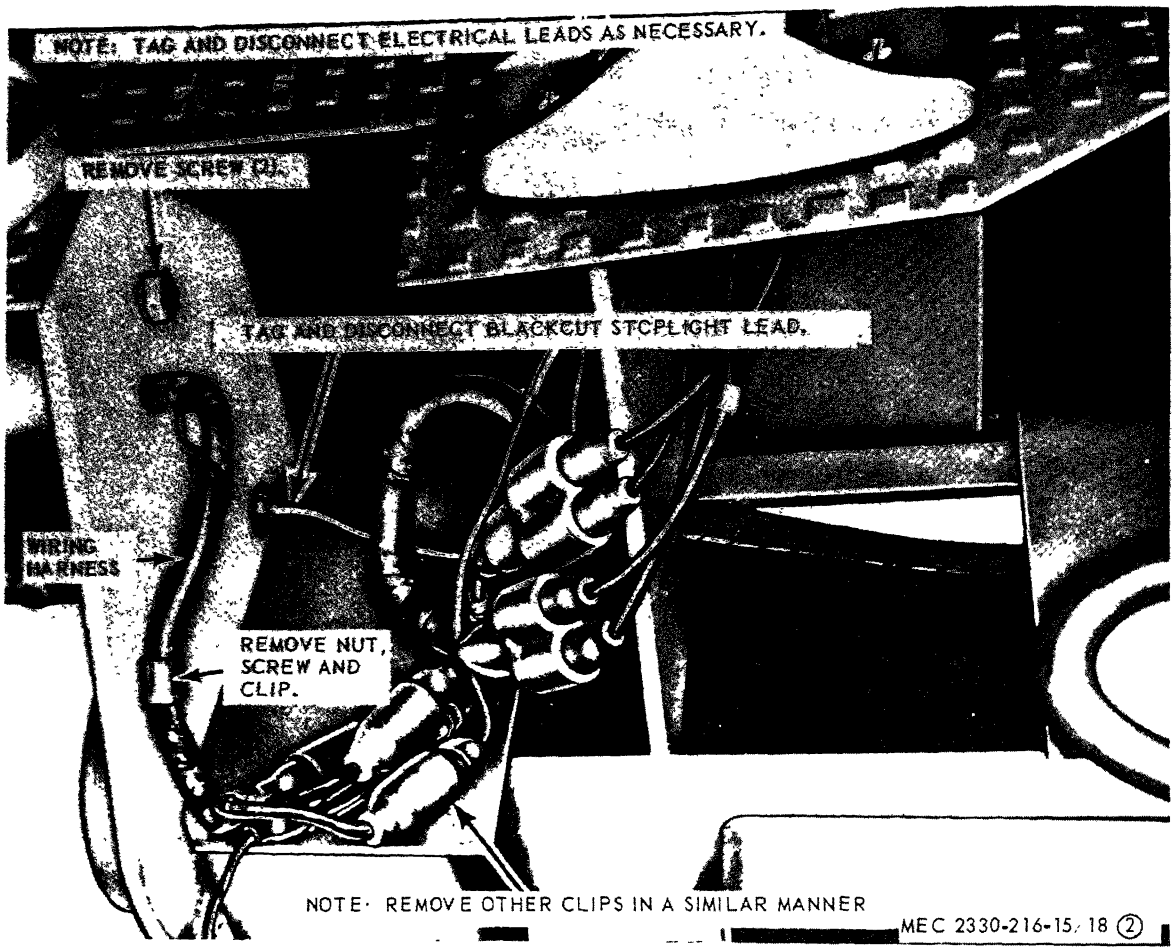

Figure 3-11—Continued.

242-451 1652

1 lackout stoplight, and taillight (Littleford ros and Henry Spen traile)

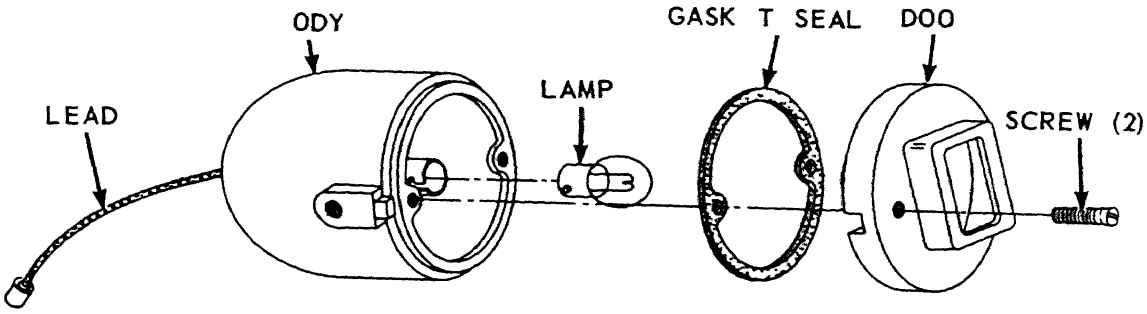

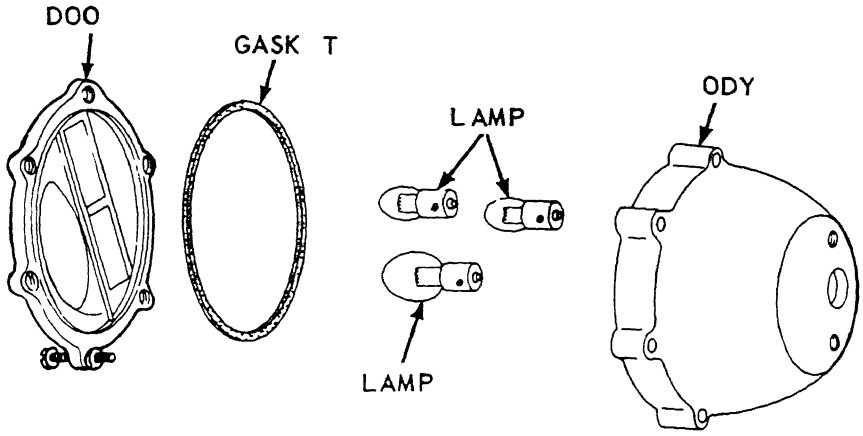

MSC 4930-200-20/6

Figure 3-12 Taillights, disassembly and reassembly

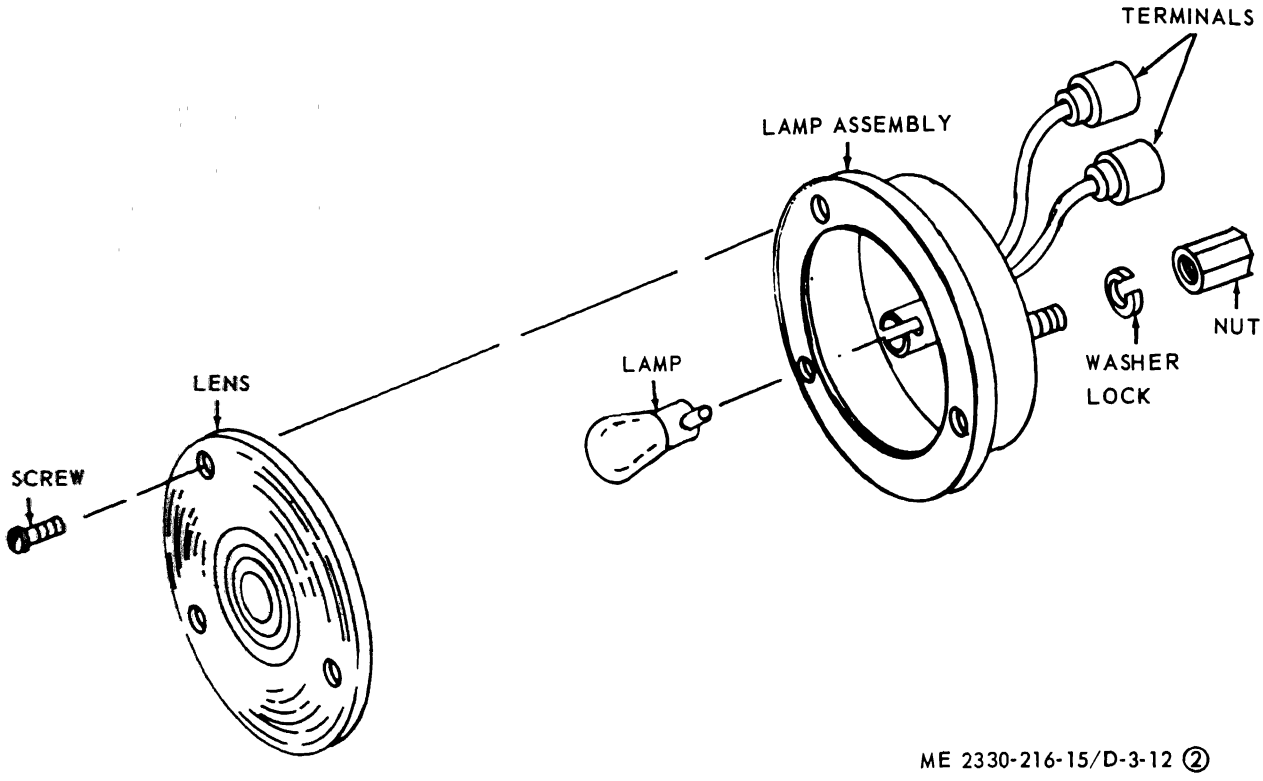

Figure 3-12—Continued.

Section VIII. FRAME ASSEMBLY

3-27. General

The frame assembly consists of the landing gear, fenders, lunette, and reflectors. The shock absorbers are two-way control, double-acting, hydraulic cylinder units.

3-28. Landing Gear and Lunette, Removal and Installation

a. Refer to figure 3-13 and remove and install anding gear and lunette.

b. Inspect landing gear and lunette for cracks, breaks, and damaged threaded parts.

3-29. Landing Gear, Disassembly and Reassembly

a. Refer to figure 3-13 and remove and install landing gear.

b Refer to figure 3-14 and disassemble and reassemble landing gear.

3-30. Shock Absorbers

a. Refer to figure 3-15 and remove and install shock absorbers.

b. Inspect for cracks, breaks, dents. Replace a defective shock absorber.

3-31. Hangers and Springs

a. Remove shock absorber (fig. 3-15).

b. Refer to figure 3-15 and remove and install hangers and springs.

c. Clean springs and hangers with an approved cleaning solvent and inspect for cracks, breaks, and other damage.

d. Replace defective hangers and springs.

3-32. Spring Bumpers

Refer to figure 3-15 and remove and install bumpers.

3-33. Fenders

a. Refer to figure 3-9 and remove and install clearance lights.

b. Refer to figure 3-16 and remove and install fenders.

c. Inspect fenders for cracks, breaks and other damage and replace a damaged or defective fender.

3-34. Wheel Chocks

a. Refer to figure 3-15 and remove and install wheel chocks.

b. Refer to figure 3-17 and repair or replace a damaged chock.

242-451 1652

NOTE: LOCK TRAILER SECURELY BEFORE REMOVING LANDING GEAR

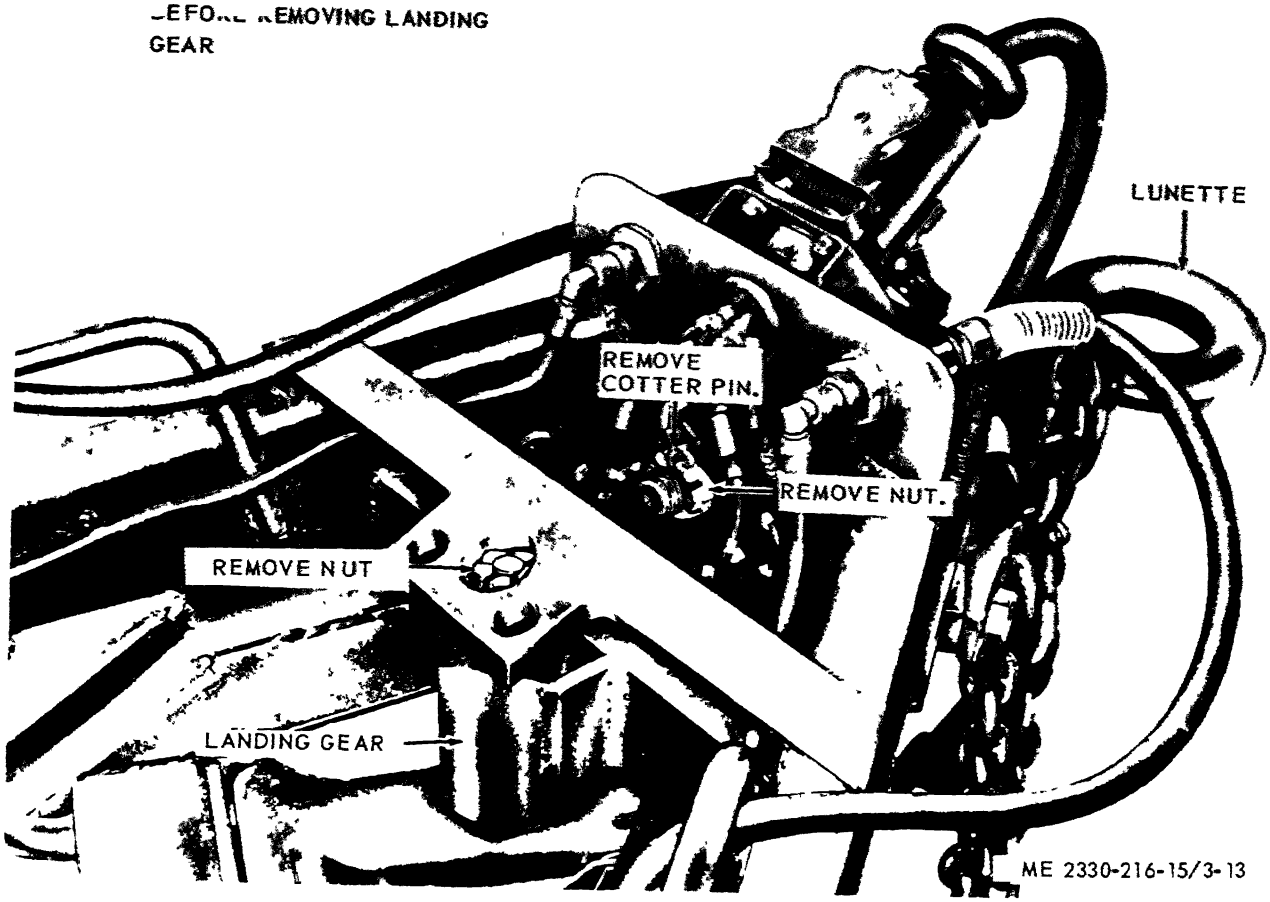

Figure 3-13 Landing gear and lunette, removal and installation

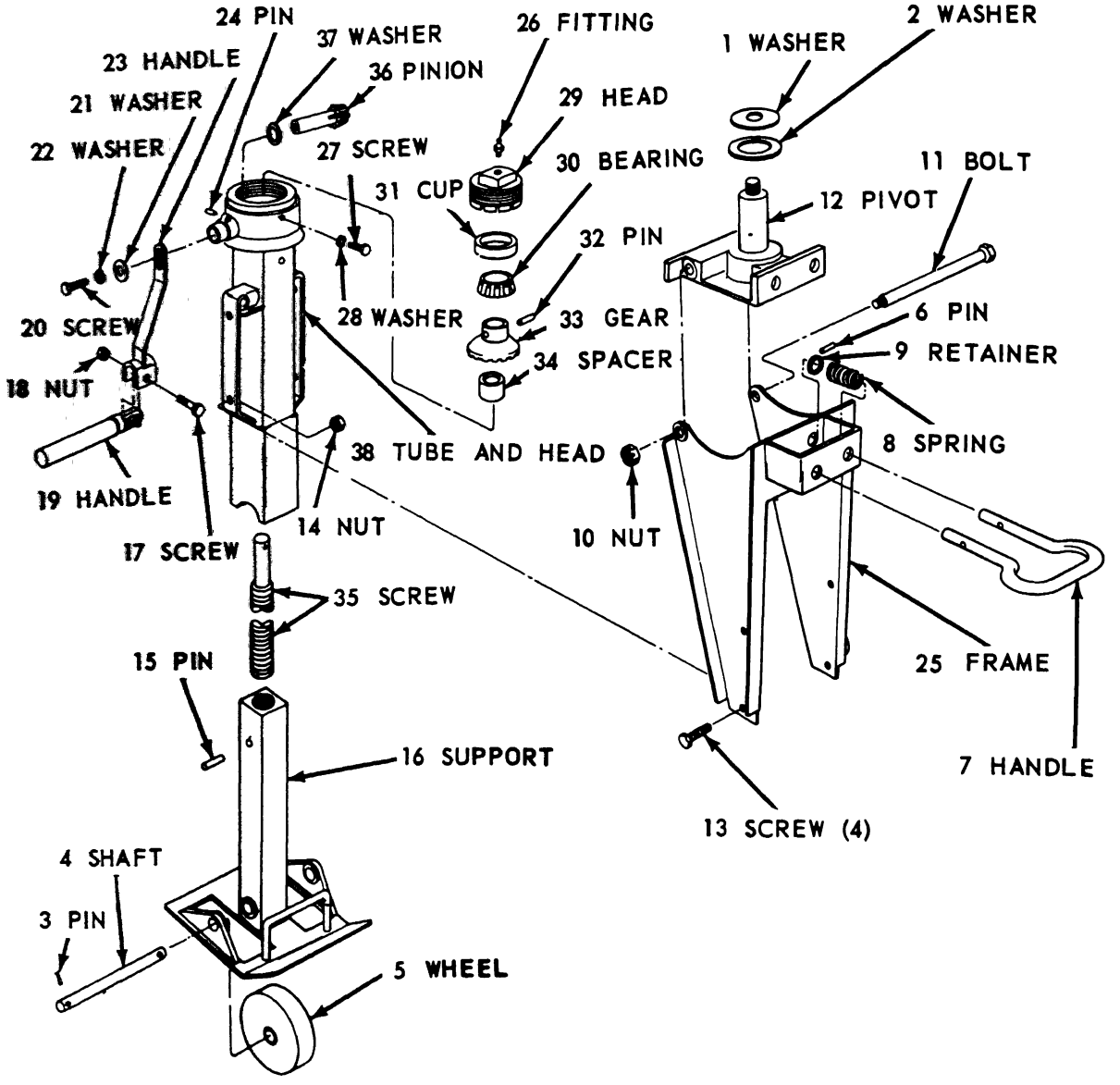

NOTE: AFTER PIN (15) IS REMOVED CRANK HANDLE (23) UNTIL SUPPORT (16) SEPARATES FROM TUBE AND HEAD (38).

MSC 4930-200-20/70

Figure 3-14. Landing gear, disassembly and reassembly.

242-451 1652

1 Shock absorbers, hangers, springs, and chock

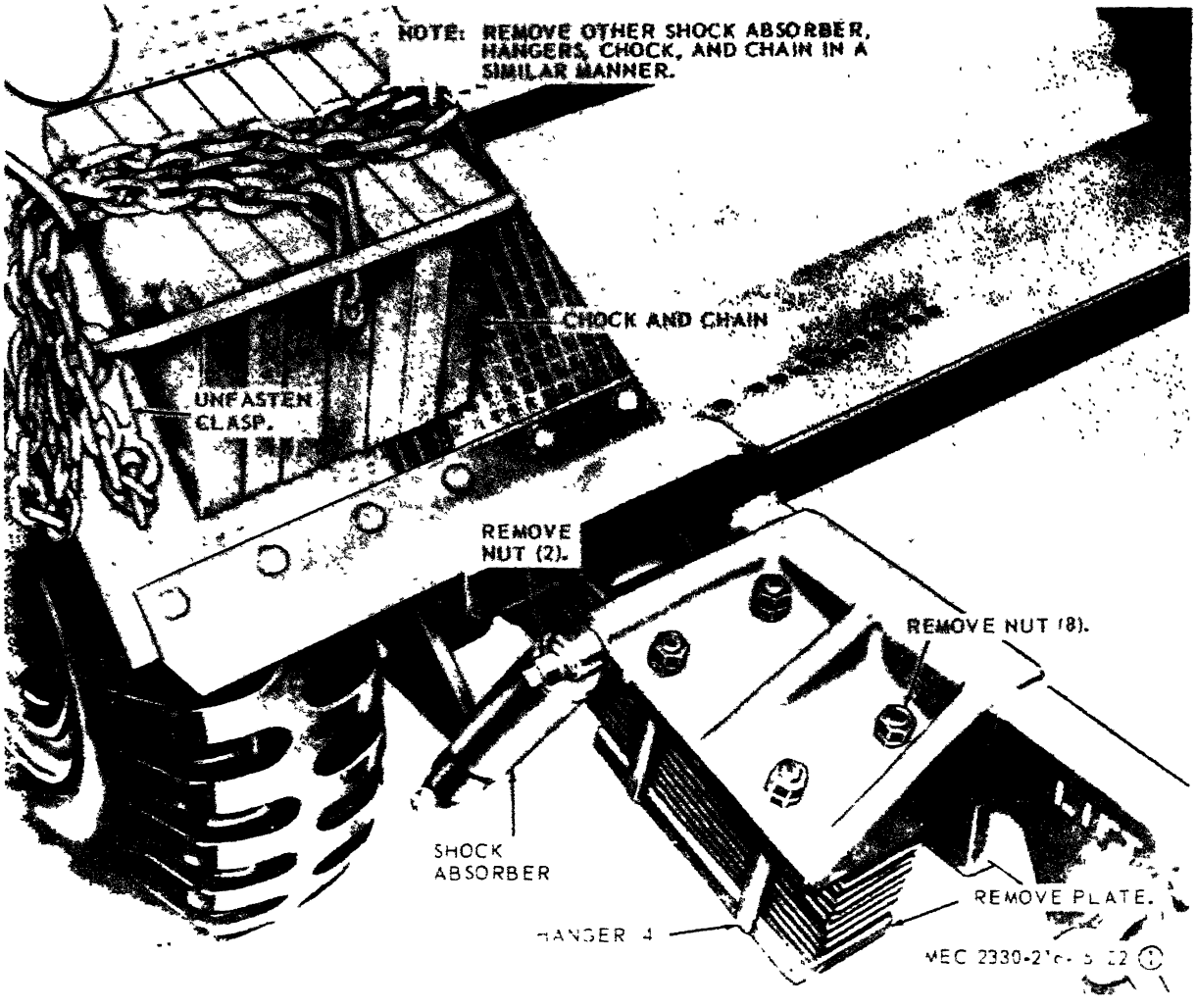

Figure 3-15. Trailer suspension system and wheel chock: removal and installation

2 Springs and bumpers

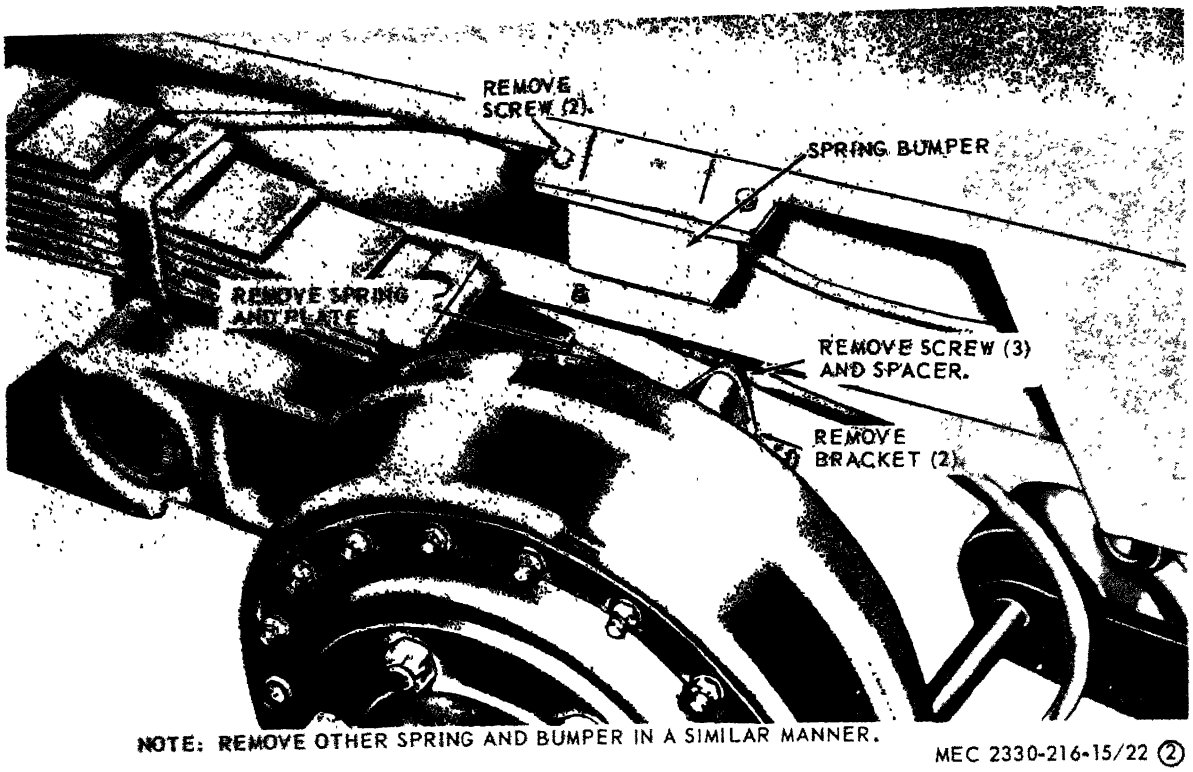

Figure 3-15—Continued.

242-451 1652

A—Littleford Bros trailer
B—Henry Spen trailer

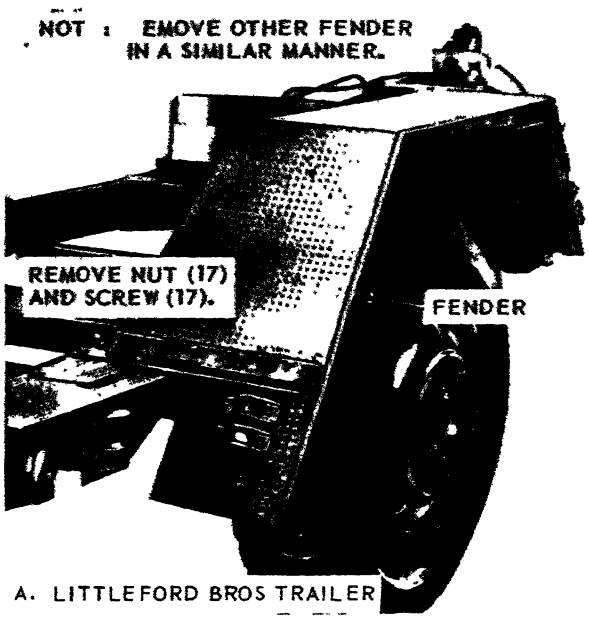

A. LITTLEFORD BROS TRAILER

NOTE: REMOVE OTHER FENDER
IN A SIMILAR MANNER.

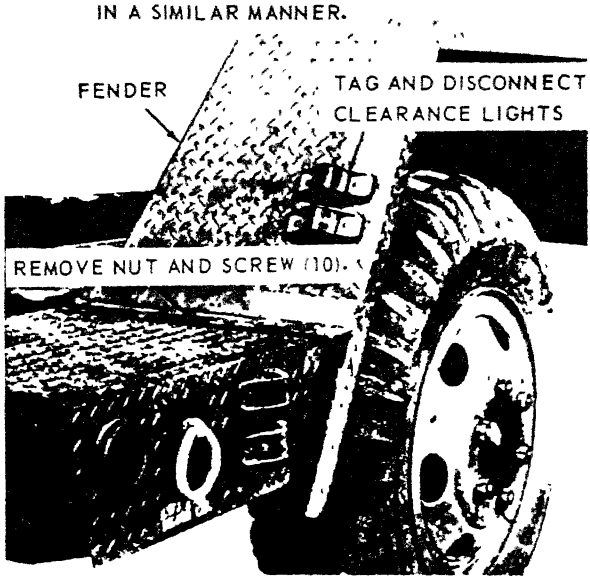

B. HENRY SPEN TRAILER

ME 2230-216-15/3-16

Figure 3-16 Fenders, removal and installation

242-451 1652

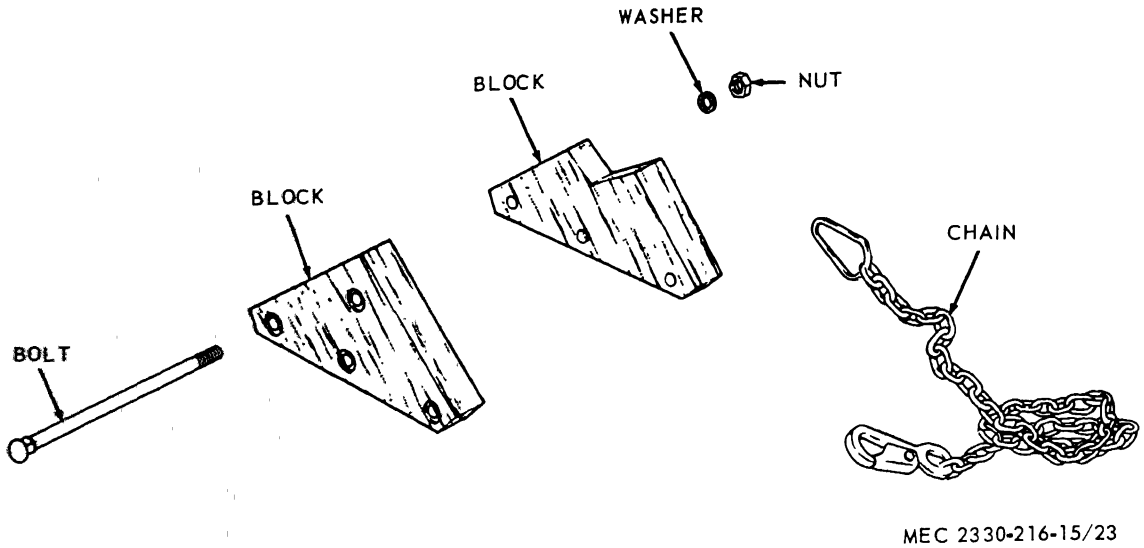

Figure 3-17. Wheel chocks.

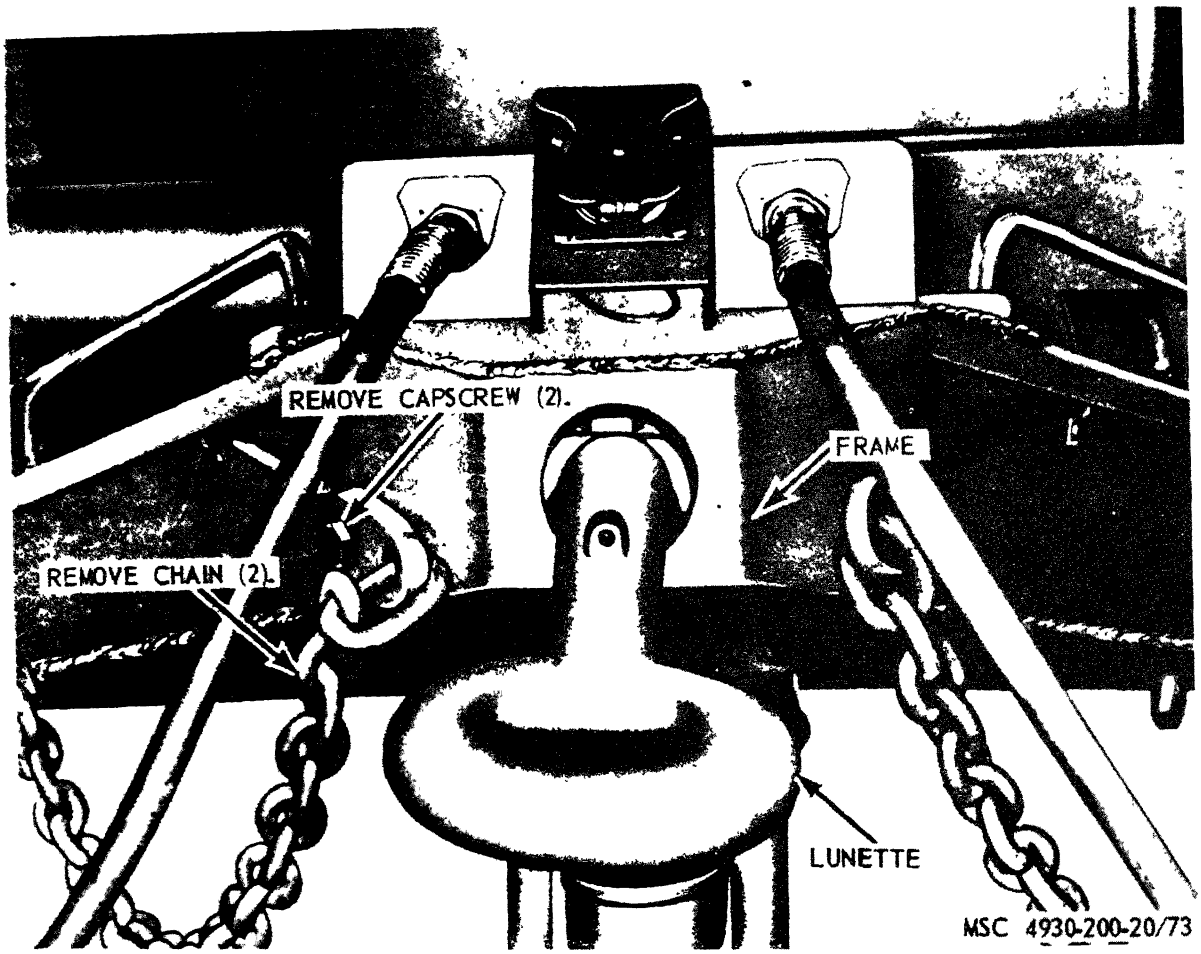

Figure 3-18. Safety chains, removal and installation.

3-35. Reflectors

Refer to figure 3-11 and replace a damaged reflector.

3-36. Safety Chains

Refer to figure 3-18 and remove and install the safety chains.

242-451 1652

CHAPT 4

H M NT AN LMT D STO AG AND MOLT ON OF T AL TO P V NT N MY US

Se I. SHIPM NT AND LIMITED STO AG

4-1. r r i t r Ship t Withi Z l t ri r

. *G al.* Detailed instructions for the prep a- tion of the trailer for do tic shipment are outlined below. Pr ervation will be acco pl hed in sequen that will not require the operation of previously pr erved components.

b. I pection. Equipment will be inspected for any unusual conditions such d age, rusting, accumulation of water, and pilferage. Inspection shall be co pleted outlined in table 3-1, Preventive Maintenance Checks and Servic . All deficienci will be recorded on DA Form 404 (Equipment Inspection and Maintenance Worksheet).

c. Cleaning and Drying. Thorou h cleaning and dryin by an approved method is the first ential procedure in any effective pr ervation process. Approved methods of application are d cribed in TM 38-230.

d. Painting Paint all surfac when the paint has been removed or damaged. Refer to TM 9-213 or detailed painting instructions

e Exterior Surfaces Coat exposed, machined, ferrous metal surfaces with preservative conforming to Specification MIL-C-11796, class 3 (Type P-6) f preservative is not available, automotive and artillery grease (GAA) as specified in the lubrication order may be used Coat exposed, noncritical, ferrous metal surfaces with pr ervative conforming to MIL-C-16173, grade 1 or 4 (Type P-1 or P-4)

f Air Reservoir Remove the fitting from tanks and spray the tank interior with type P-10, grade 2, engine preservative oil conforming to Specification MIL-L-21260, and reinstall fitting Open draincock to allow excess preservative oil to drain Leave draincock open to allow condensation to drain.

g Depreservation Guide A properly annotated depreservation guide (DA Form 2258 (Preservation and Depreservation Guide for Vehicles and Equipment)) will be completed concurrently with the preservation of each item of mechanical equipment with any peculiar requirements outlined in spaces 28 through 33. The completed depr ervation guide will be placed in a waterproof envelope, marked "Depr ervation Guide" and f tened in a conspicuous location on the trailer.

h. Marking. Shall confor to MIL-STD-12 .

4- . L di i t r i t

a. Use a lifting device of sufficient capacity and ho t the trailer on the carrier.

b. For over the road shipment, determine road and bridge limitations and d play warnin flags. Be sure all stop, clearance, and tailli hts are in proper workin order.

4- . Pr par ti of i t r Li it St r

a. General. Detailed instructions for pr ervin and maintaining the trailer in limited storage are outlined in this paragraph. Limited storage defined storage not to exceed 6 months.

b. Inspection. Refer to paragraph 4-1*b*.

c. Cleaning and Drying. Refer to paragraph 4-1*c*.

d Painting. Refer to paragraph 4-1*d*.

e. Exterior Surfaces. Refer to paragraph 4-1*e*.

f. Air Reservoir. Refer to paragraph 4-1*f*

g Depreservation Guide. Refer to paragraph 4-1*g*.

h Pneumatic Tires Pneumatic tir will be inflated to operating pr sure.

i Weatherproofing When suitable shelter is not available, select a firm, level, well-drained storage location protected from prevailing winds. Position the equipment on heavy planking or other solid surfaces Cover the equipment with a tarpaulin or other suitable waterproof covering and tie down securely

4-4. Inspection nd Mainten nce of E uip nt in Stor e

a Inspection When equipment has been placed in storage, all schedule preventive maintenance services, including inspection, will be suspended and preventive maintenance inspection shall be performed as specified herein Refer to TM 740-90-1

b Worksheet and Preventive Maintenance Applicable forms listed in TM 38-750 will be prepared for each major item of equipment when initially placed in limited storage and every 90 days thereafter. Perform required maintenance promtly to make sure equipment is mechanically sound and ready for immediate use.

c. Exercising. Every 0 days, equipment will be inspected outlined in paragraph 4-1 and operated

242-451 1652

long enough for complete lubrication of gears, bearings, etc. After each exercising period, the equipment will be represerved as described in paragraph 4-1.

Section II. DEMOLITION OF THE TRAILER TO PREVENT ENEMY USE

4-5. General

When capture or abandonment of the trailer to an enemy is imminent, the responsible unit commander must make the decision either to destroy the equipment or render it inoperative. Based on this decision, orders are issued which cover the desired extent of destruction. Whatever method of demolition is employed, it is essential to destroy the same vital parts of all trailers and all corresponding repair parts.

***Caution:* Equipment will not be destroyed except on orders of proper authority.**

4-6. Demolition to Render the Equipment In-

crow-
which
ing:

air chamber.

tubes.

steps are the minimum requirements for this method.

(5) The springs.

(6) The frame and wiring harness.

b. Misuse. Perform the following steps to render the trailer inoperative.

(1) Drain the hydraulic system.

(2) Deflate the tires and tow the trailer at high speed over rough terrain.

4-7. Demolition by Explosives or Weapons Fire

a. Explosives. Place as many charges in the following locations as the situation permits and detonate them simultaneously with detonating cord and a suitable detonator.

(1) One ½-pound charge on the landing gear.

(2) One ½-pound charge between each backplate and axle stub arm.

b. Weapons Fire. Fire on the trailer with the heaviest practical weapons available.

4-8. Other Demolition Methods

a. Scattering and Concealment. Remove all easily accessible parts such as the wheels, air reservoir, relay valve, air chamber, wiring harness, and lunette and scatter them through dense foliage, bury them in dirt or sand, or throw them in a lake, stream or other body of water.

b. Submersion. Submerge the trailer in a body of water to provide water damage and concealment.

4-9. Training

All operators should receive thorough training in the destruction of the trailer. Refer to FM 5-25. Simulated destruction, using all of the methods listed above, should be included in the operator training program. It must be emphasized in training, that demolition operations are usually necessitated by critical situations when time for carrying out destruction is limited. For this reason, it is necessary that operators be thoroughly familiar with all methods of destruction of equipment, and be able to carry out demolition instructions without reference to this or any other manual.

242-451 1652

C APT

CT U O T, G AL U O T, A OT MA NT A C ST CTO

Se . G AL

– . Sc

Th chapter conta tructio for the e of d t support, en al support, d depot inte pe onnel a ta the trailer llocated by the Maintenance Allocatio Chart. It provid imfo ation on the aintenan of the equip ent which beyo d the scope of the tools, equip ent, personnel, or suppli normally av ilable to or aniz tion l a te nce.

5– . F rds

DA Fo d r rds ed for equip ent - tena ill be only th e pr cribed TM 38–7 0.

Secti I. IPTIO A ATA

– . ri

For a co plete d cription of the trailer, s p agraph 1– .

5–4. T b l

S p agraph 1–4 for t bulated data applicable to the Littleford Brothe and Henry Spen and Co - pany Ch , Traile .

III. A A T, CIAL TOOLS, A Q IPM T

– . i l T ls i t

No sp ial tools and equip ent are required to perform Direct Support, General Support and Depot Maintenance on the trailer.

–6. ir t S , G r l S rt, d t M i t c ir P

Direct and eneral support and depot maintenance repair parts e listed and illustrated in Append D of th anual.

–7. S i lly si d (F bri t) T ls i t

No specially d igned (fabricated) tools and equipment are required to perform direct support, eneral support, and depot maintenance on the trailer.

Secti IV. T OU L SHOOTING

– . G r l

Th section provid informaton useful in diagnosing and correcting unsat factory operation or failure of the trailer and its components Malfunctions which may occur e listed in table 5–1 Each malfunction stated is followed by a list of probable caus of the trouble The corrective action recommended d cribed opposite the probable cause

Table 5–1 Troubleshooting

	Malfu ion		*Probable cause*		*Corrective action*
1	Brakes fail	*a*	ke valve defective	*a*	Replace valve (fig 3–6)
		b	Brake linings worn or excessively dirty or gre y	*b*	Replace linings (fig 6–2)
		c	M ter cylinder defective	*c*	Replace or repair m ter cylinder (fig 3–6)
2	kes noisy		rake linings dirty, worn or oily		Replace linings (fig 6–2)
3	kes grab	*a*	rake valve defective	*a.*	Replace valve (fig 3–6)
		b	rake linings oily or gre y	*b*	Replace linings (fig 6–2)

242-451 1652

CHAPTER 6

REPAIR INSTRUCTIONS

Section I. SERVICE BRAKES

6-1. General

The trailer service brakes are the scavenger type actuated by a diaphragm-type air chamber. Each brake has two wheel cylinders secured to the backing plate. The wheel cylinders are actuated hydraulically to give an equal pressure to all brace shoes.

6-2. Backplate

a. Remove and install brakeshoes and wheel cylinder (fig. 3-3 and 3-4).

b. Refer to figure 6-1 and remove and install the backplate.

shoes and wheel

b. Remove and install brakeshoe linings (fig. 6-2

6-4. Wheel Cylinders

a. Remove and install the brake shoes and whe cylinders (figs. 3-3 and 3-4).

b. Disassemble and reassemble wheel cylinde (fig. 6-3).

6-5. Master Cylinder

a. Refer to figure 3-6 and remove and install tl master cylinder.

b. Refer to figure 6-4 and disassemble and r assemble master cylinder.

242-451 1652

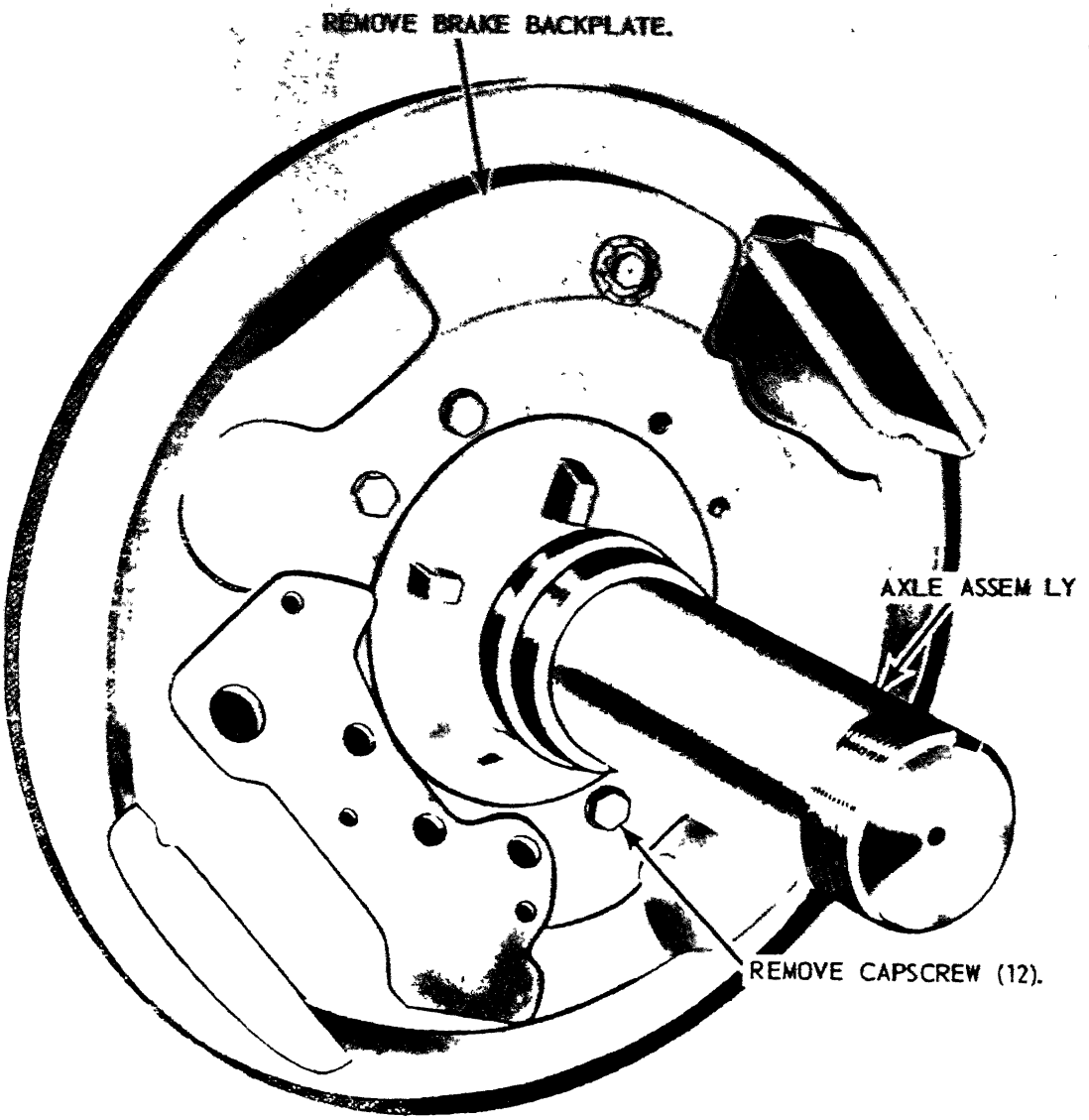

MSC 4930-200-35/36

Figure 6-1. Brake backplate, removal and i tallation

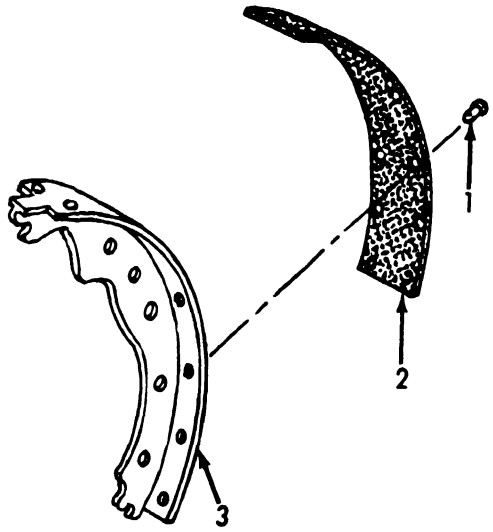

NOTE: DISASSEMBLE REMAINING BRAKESHOES IN A SIMILAR MANNER.

MSC 4930-200-35/37

1 Rivet 2 Lining 3 Brakeshoe

Figure 6-2. Brakeshoe linings, removal and installation.

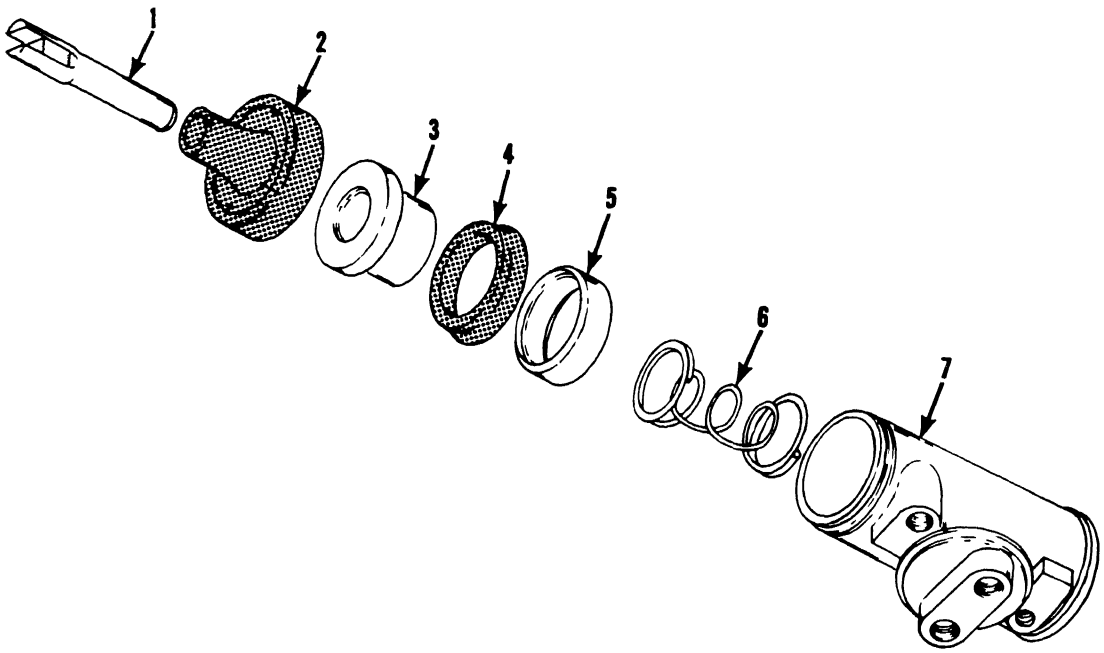

MSC 4930-200-35/38

1 Link
2 Boot
3 Piston
4 Cup
5 Ring
6 Spring
7 Cylinder body

Figure 6-3. Wheel cylinder, disassembly and reassembly.

242-451 1652

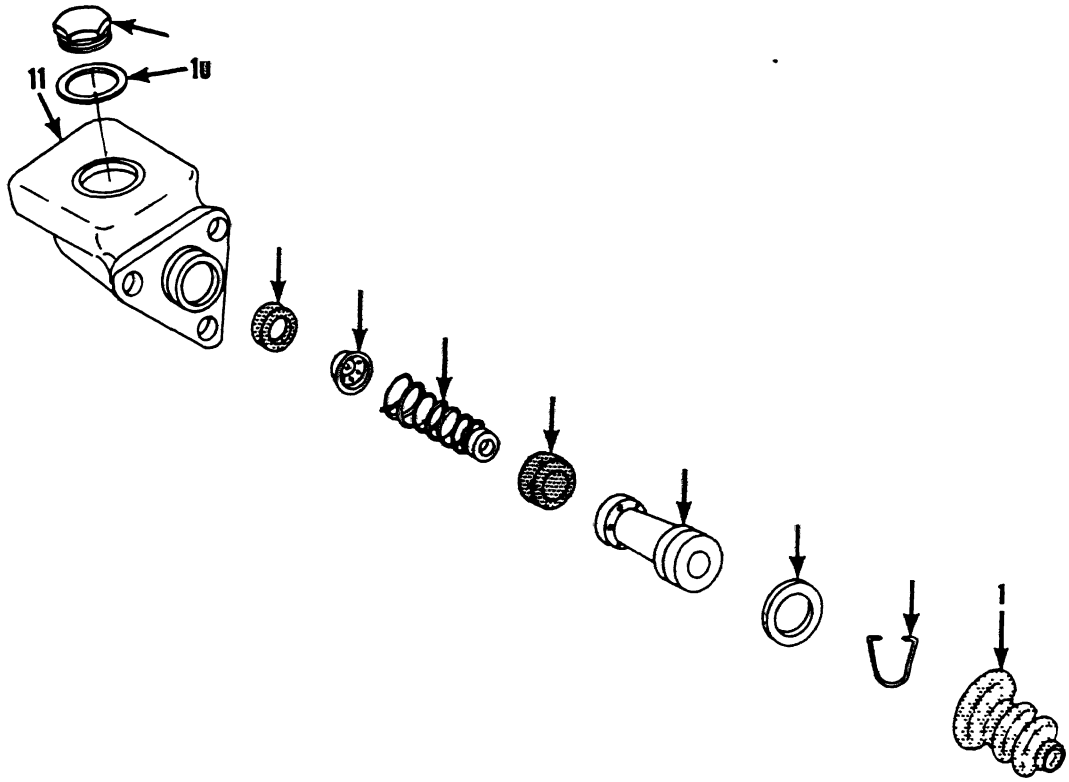

1	oot	7	Valve
2	Ring	8	S t
3	Washer	9	Cap
4	Piston	10	W her
5	Cup	11	Body
6	Spring		

Figure 6-4 M ter cylinder, disassembly ana re s bly

S cti II. AXL ASS M LY

6-6. G n r l

The trailer axle is a welded assembly consisting of an axle tube and a tie beam connecting the axle tube with a stud axle on which the wheels are mounted. The axle tube is mounted to the trailer frame with two bearings, one on each side of the trailer frame. A shock absorber mounting link is welded to each end of the axle tube

6-7. Axle Ass bly— v l nd l st ll - tion

a Remove and install the shock absorbers (fi 3-15)

b Remove and install springs (fig 3-15)

c Remove and install brake assemblies (figs. 3-3 and 3-4)

d Refer to figure 6-5 and remove and install axle assembly

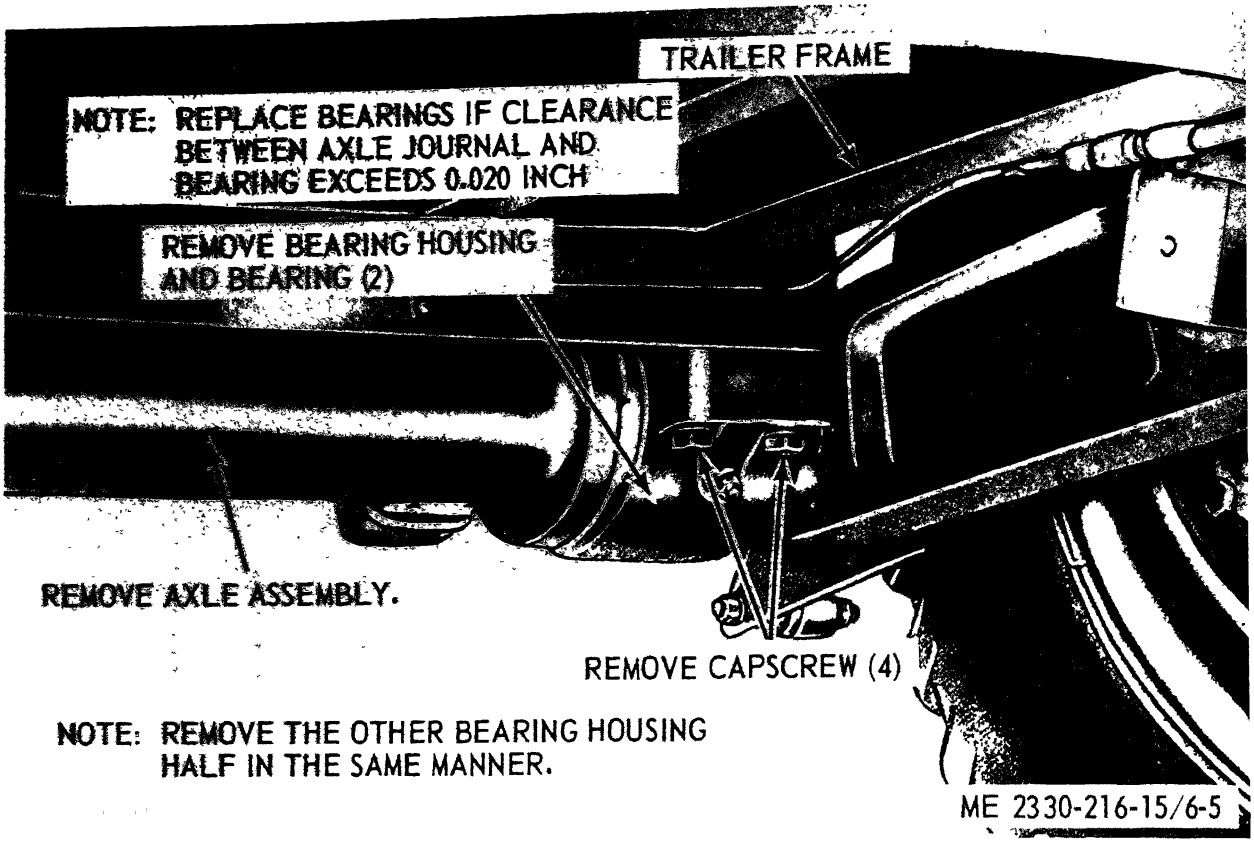

Figure 6-5. Axle assembly, removal and installation.

Section III. FRAME ASSEMBLY

6-8. General

The trailer frame is an all steel-welded construction consisting of two paralleled frame rails with cross-members between the rails. The frame has a landing gear bracket, spring hanger bracket, hand lifting bars, lashing rings, and two upper halves of the bearing housing welded to it.

6-9. Frame Assembly—Removal and Installation

a. Refer to figures 3-9 and 3-11 and remove and install reflectors, clearance lights, taillights, and blackout lights.

b. Remove and install lunette (fig. 3-13).

c. Remove and install brake hydraulic system tubing.

d. Remove and install the brake air system tubing (fig. 3-6).

e. Remove and install the brake air chamber and master cylinder (fig. 3-6).

f. Remove and install the brakes and wheel cylinders (figs. 3-3 and 3-4).

g. Remove and install brake valve (fig. 3-6).

h. Remove and install the air reservoir (fig. 3-8).

i. Remove and install the landing gear (fig. 3-13).

j. Remove and install the shock absorber (fig. 3-15).

k. Remove and install springs (fig. 3-15).

l. Remove and install axle assembly (fig. 6-5).

242-451 1652

APP ND X A

F NC S

A-1. L bri ti

C 1 0-IL	Fuels, Lubricants, Oils and W .
LO 5- 0- 1 -15	Ch , Trailer; ½ Ton; Drop Axle; 2 Wh l, ENG DWGS: D111 -1 thru 14 and ENG DWG 1321 E6 0.

A- . i ti

TM - 1	Paintin I tructio for Field Use.

A- . M i t

TM -1 70-1	Care and Maintenance of Pneumatic Tir .
TM -750	Army Equipment Records.
TM - 330-21 -15	Op ator, Org ational, Dir t and G al Support, Depot Ma ten d Repair P ts Manual.

A-4. i t d St r

TB 740- 3-	Pr ervation of USAMEC M hanical Equip ent for Ship ent and Storage.
TM 740- 0-1	Admin trative Storage of Equip ent.

APPENDIX B
BASIC ISSUE ITEMS LIST

Section I. INTRODUCTION

B-1. Scope

This appendix lists items which accompany the chassis, trailer or are required for installation, operation, or operator's maintenance.

B-2. General

This Basic Issue Items List is divided into the following sections:

a. Basic Issue Items—Section II. A list of items which accompany the chassis, trailer or are required for the installation, operation, or operator's maintenance.

b. Maintenance and Operating Supplies—Section III. A listing of maintenance and operating supplies

s an explanation of columns in
sic Issue Items, Section II.

a. Source, Maintenance, and Recoverability Codes (SMR), Column 1:

(1) Source Code, indicates the selection status and source for the listed item. Source codes are—

Code	Explanation
P	Applied to repair parts which are stocked in or supplied from GSA/DSA or Army supply system, and authorized for use at indicated maintenance categories.

(2) Maintenance Code, indicates the lowest category of maintenance authorized to install the listed item. The maintenance level code is—

Code	Explanation
C	Operator/crew

b. Federal Stock Number, Column 2. This column indicates the Federal stock number for the item.

c. Description, Column 3. This column indicates the Federal item name and any additional description of the item required. A part number or other reference number is followed by the applicable five-digit Federal supply code for manufacturers in parentheses. Repair parts quantities included in kits, sets, and assemblies are shown in front of the repair part name.

d. Unit of Issue, Column 4. This column indicates the unit used as a basis for issue, e.g., ea, pr, ft, yd, etc.

e. Quantity Incorporated in Unit Pack, Column 5. This column indicates the actual quantity contained in the unit pack.

f. Quantity Incorporated in Unit, Column 6. This column indicates the quantity of the item used in the functional group.

g. Quantity Furnished with Equipment, Column 7. This column indicates the quantity of an item furnished with the equipment.

h. Quantity Authorized, Column 8. This column indicates the quantity of an item authorized the operator/crew to have on hand or to obtain as required. As required items are indicated with an asterisk.

i. Illustration, Column 9. This column is divided as follows:

(1) *Figure Number, Column 9a.* Indicates the figure number of the illustration in which the item is shown.

(2) *Item Number, Column 9b.* Indicates the callout number used to reference the item in the illustration.

B-4. Explanation of Columns in the Tabular List of Maintenance and Operating Supplies—Section III

a. Component Application, Column 1. This column identifies the component application of each maintenance or operating supply item.

b. Federal Stock Number, Column 2. This column indicates the Federal stock number for the item and will be used for requisitioning purposes.

c. Description, Column 3. This column indicates the item and brief description.

d. Quantity Required for Initial Operation, Column 4. This column indicates the quantity of each maintenance or operating supply item required for initial operation of the equipment.

e. Quantity Required for 8 Hours Operation, Column 5. This column indicates the estimated quantities required for an average eight hours of operation.

f. Notes, Column 6. This column indicates informative notes keyed to data appearing in a preceding column.

242-451 1652

II. A C I U ITEM

(1) S R code	(2) F eral s k No.	(3) ption Ref No & mfr e / U ble on code	(4) Unit of	(5) Qty inc in unit pack	(6) ty inc in unit	(7) Qty f with ip	(8) Qty	(9) Illustration (a) Fig No.	(b) Item No.
		GROUP 31— A IC I U , IT M ; ANUFACTU IN TALL D							
		3100— A IC I U IT M , ANUFACTUR R OR D POT IN TALL D							
PC	7520-559-9618	CA : MAINT NANC AND OPERATIONAL ANUALS, COTTON DUC , WAT R P LL NT, ILD W RE- I TA T, IL-B-11743- .	----	----	----	1	1	----	----
		D PART NT OF T ARMY LU RICATION O D R LO 2330-216-15.	----	----	----	1	1	----	----
		D PART NT OF T AR Y OP RATOR, ORGANI A- TIONAL, DI CT AND G NERAL UPPORT, D POT AINT NANC , R PAIR PARTS AND P CIAL TOOL LI T ANUAL TM 5-2330-216-15.	----	----	----	1	1	----	----
		GROUP 32— A IC I U IT MS, TROO IN TALL D							
		3200— A IC IS U IT M , TROOP IN TALL D OR AUT ORI D							
PC	2590-038-3914	CA L ASS M LY, P CIAL PURPO , L CTRICAL: connects trailer to pri e over (Rep r Parts anu G up 0613).	----	----	----	1	1	----	----
PC	5120-223-7396	PLI RS, SLIP JOINT· straight nose, co bination w/cutter, 6 in. lg.	----	----	----	1	(*)	----	----
PC	5120-2 -8910	SCR WDRIVER, FLAT TIP: flared tip, pl tic handle 5/16 in. tip width, 6 in. lg	----	----	----	1	(*)	----	----
PC	5120-240-5328	WRENCH, OPEN ND, ADJUSTA LE single head type, 0 to 0 947 in. opening, 8 in. lg	----	----	----	1	(*)	----	----

cti III. MAINTENANC AND OP ATING SU PLI

(1) Component application	(2) Federal stock No	(3) D ription	(4) Q itity required f/initial operation	(5) Q itity required f/8 hrs operation	(6) No
1204—HYDRAULIC RAKE SYSTEM	9150-190-0932	HYDRAULIC FLUID H 1 pt can	5/16 qt.	(1)	(1) See current LO for grade application and replenish ent intervals
Gre e Fittin ----------	9150-190-0905	GREASE, AUTOMOTIVE AND ARTILLERY 5 lb can	--------	(1)	

242-451 1652

APPENDIX C
MAINTENANCE ALLOCATION CHART

Section I. INTRODUCTION

C-1. General

a. This appendix provides a general explanation of all maintenance and repair functions authorized at various maintenance levels.

b. Section II designates overall responsibility for the performance of maintenance functions on the identified end item or component. The implementation of the maintenance functions upon the end item or component will be consistent with the assigned maintenance functions.

c. Section III. Not applicable.

d. Section IV. Not applicable.

C-2. Explanation of Columns in Section II

a. Group Number. Column 1. The functional group is a numerical group set up on a functional basis. The applicable functional grouping indexes (obtained from TB 750-93-1, Functional Grouping Codes) are listed on the MAC in the appropriate numerical sequence. These indexes are normally set up in accordance with their function and proximity to each other.

b. Functional Group. Column 2. This column contains a brief description of the components of each functional group.

c. Maintenance Functions. Column 3. This column lists the various maintenance functions (A through K) and indicates the lowest maintenance category authorized to perform these functions. The symbol designations for the various maintenance categories are as follows:

C—Operator or crew.

O—Organizational maintenance.

F—Direct support maintenance.

H—General support maintenance.

D—Depot maintenance.

The maintenance functions are defined as follows:

A—INSPECT. To determine serviceability of an item by comparing its physical, mechanical, and electrical characteristics with established standards.

B—TEST. To verify serviceability and to detect electrical or mechanical failure by use of test equipment.

C—SERVICE. To clean, to preserve, to charge, to paint, and to add fuel, lubricants, cooling agents, and air.

D—ADJUST. To rectify to the extent necessary to bring into proper operating range.

F—CALIBRATE. To determine the corrections to be made in the readings of instruments or test equipment used precise measurement. Consists of the comparisons of two instruments, one of which is a certified standard of known accuracy, to detect and adjust any discrepancy in the accuracy of the instrument being compared with the certified standard.

G—INSTALL. To set up for use in an operational environment such as an emplacement, site, or vehicle.

H—REPLACE. To replace unserviceable items with serviceable assemblies, subassemblies, or parts.

I—REPAIR. To restore an item to serviceable condition. This includes, but not limited to, inspection, cleaning, preserving, adjusting, replacing, welding, reveting, and strengthening.

J—OVERHAUL. To restore an item to a completely serviceable condition as prescribed by maintenance serviceability standards using the Inspect and Repair Only as Necessary (IROAN) technique.

K—REBUILD. To restore an item to a standard as nearly as possible to original or new condition in appearance, performance, and life expectancy. This is accomplished through complete dissembly of the item, inspection of all parts or components, repair or replacement of worn or unserviceable elements (items) using original manufacturing tolerances and specifications, and subsequent reassembly of the item.

d. Tools and Equipment—Column 4. This column provided for referencing by code the special tools and test equipment (Section III) required to perform the maintenance functions (Section II).

e. Remarks—Column 5. This column is provided for referencing by code the remarks (Section IV) pertinent to the maintenance functions.

242-451 1652

Se · II. MAINTENA CE ALLOCATION CHA T

(1) G p No.	(2) Funct	(3) n · notions A Inspect	B Test	C Service	D Adjust	E Align	F Calibrate	G Install	H Replace	I Repair	J Overhaul	K Rebuild	(4) T equipment	(5) Remarks
	L CT ICAL Y T M:													
	Lights:													
	top lights; cl ce lights	---	---	---	---	---	---	---	O	O				
	La ps	C	---	---	---	---	---	---	C					
13	Ch sis Wirin a s	---	---	---	---	---	---	---	O	O				
11	R AR AXL :													
1108	tub Axl :													
	Axle bly	F	---	---	---	---	---	---	F					
	Bearin	F	---	C	---	---	---	---	F					
12	AK :													
1202	Service rak	---	---	---	O	---	---	---	F	O				
1204	ydraulic rake yste :													
	M ter cylinder e bly	---	---	C	---	---	---	---	O	F				
	Wh l cylinder e bly	---	---	---	---	---	---	---	O	F				
1208	Air rake Syste ·													
	rake cha ber	---	---	---	---	---	---	---	O	O				
	Air filter	---	---	C	---	---	---	---	O					
	Emergency relay valve	---	---	---	---	---	---	---	O					
	Air reservior	---	---	C	---	---	---	---	O					
13	WHEELS													
1311	Wh l Assembly	---	---	O	---	---	---	---	O					
1313	Tires, Tubes	O	---	C	---	---	---	---	O	O				
15	FRAME TOWING ATTACHMENTS.													
1501	Frame Assembly	---	---	---	---	---	---	---	H	H				
1503	Towing Attachments	O	---	---	---	---	---	---	O					
1507	Leveling Jack	---	---	C	---	---	---	---	O	O				
16	SPRINGS AND SHOCK A SORBERS·													
1601	Springs	O	---	---	---	---	---	---	O					
1604	Shock Absorber Equipment	O	---	---	---	---	---	---	O					
18	ODY, CA , HOOD AND HULL													
1801	Body													
	Fenders	O	---	---	---	---	---	---	O	O				
22	ACCESSORY ITEMS													
2202	Accessory Items													
	Chocks, wheel	---	---	---	---	---	---	---	O	O				
	Reflectors, and safety chain	O	---	---	---	---	---	---	O					
2210	Data Plates													
	Plates, instruction	O	---	---	---	---	---	---	O					
	Plates, identification (A I P)	F	---	---	---	---	---	---	F					

242-451 1652

APPENDIX D

ORGANIZATIONAL, DIRECT, AND GENERAL SUPPORT AND DEPOT MAINTENANCE REPAIR PARTS AND SPECIAL TOOL LISTS

Section I. INTRODUCTION

D-1. Scope

This appendix lists repair parts and special tools required for the performance of organizational, direct support, general support and depot maintenance of the Chassis, Trailer.

D-2. General

a. The repair parts list is arranged as follows:

(1) Individual parts and major assemblies are listed alphabetically by item name within the numbered functional groups.

(2) Assembly components and subassemblies are indented and listed alphabetically by item name under major assemblies.

b. This Repair Parts and Special Tools List is divided into the following sections:

(1) *Prescribed Load Allowance (PLA)—Section II.* A consolidated listing of repair parts quantitatively allocated for initial stockage at the organizational level. *This is a mandatory minimum stockage allowance.*

(2) *Special Tools, Test and Support Equipment—Section III.* No special tools or test and support equipment required for the performance of maintenance at the organizational level.

(3) *Repair Parts—Section IV.* A list of repair parts authorized for the performance of maintenance at the organizational level.

(4) *Repair Parts—Section V.* A list of repair parts authorized for the performance of maintenance at the direct support, general support, and depot level.

(5) *Special Tools, Test and Support Equipment—Section VI.* No special tools or test and support equipment required for the performance of maintenance at the direct support, general support, and depot level.

(6) *Federal Stock Number and Reference Number Index—Section VII.* A list of Federal stock numbers followed by reference numbers, appearing in all the listings, in ascending alpha-numeric sequence cross-referenced to index number.

D-3. Explanation of Columns

The following provides an explanation of columns in the tabular lists in sections II through VI.

a. Source, Maintenance, and Recoverability Codes (SMR).

Note. Common hardware items known to be readily available in Army supply channels will be assigned Maintenance codes only. Source codes, Recoverability codes, and Maintenance Allowances will not be assigned to this category.

(1) *Source code.* Indicates the selection status and source for the listed item. Source codes used are—

Code	*Explanation*
P	Applied to repair parts which are stocked in or supplied from DSA/GSA or Army supply system, and authorized for use at indicated categories.
M	Applied to repair parts which are not procured or stocked but are to be manufactured at indicated maintenance categories.
A	Applied to assemblies which are not procured or stocked as such but made up of two or more units, each of which carry individual stock numbers and descriptions and are procured and stocked and can be assembled by units at indicated maintenance categories.
X	Applied to parts and assemblies which are not procured or stocked, the mortality of which is normally below that of the applicable end item, and the failure of which should result in retirement of the end item from the supply system.
X1	Applied to repair parts which are not procured or stocked, the requirement for which will be supplied by use of the next higher assembly or components.
X2	Applied to repair parts which are not stocked. The indicated maintenance category requiring such repair parts will attempt to obtain them through cannibalization; if not obtainable through cannibalization, such repair parts will be requisitioned with supporting justification through normal supply channels.
C	Applied to repair parts authorized for local procurements. If not obtainable from local procurement, such repair parts will be requisitioned through normal supply channels with a supporting statement of nonavailability from local procurement.
G	Applied to major assemblies that are procured with PEMA (Procurement Equipment Missile Army) funds for initial issue only to be used as exchange assemblies at DSU and GSU maintenance level. These assemblies will not be stocked above DSU and GSU level or returned to depot supply level.

(2) *Maintenance code.* Indicates the lowest category of maintenance authorized to install the listed item. The maintenance level codes are—

Code	*Explanation*
O	Organizational maintenance.
F	Direct support maintenance.
H	General support maintenance.
D	Depot maintenance.

242-451 1652

( ) *R ability code.* Indicates wheth un- serviceable ite should be returned for recovery or salvage. Ite not coded are pendable. Re- coverability cod are—

c	pla ion
R----------	Applied to pair p ts d bli which are econo ically repairable at DSU and GSU activiti and normally e furnished by supply on an exchange b is.
T----------	Applied to high dollar value recoverable repair parts which a subject to spec' l handling and issued on exchange b is. Such repair parts normally are repaired or overhauled at depot aintenance activities.
U----------	Applied to repair parts specifically lected for salvage by reclamation units because of precious metal content, critical materials, high dollar value reuseable c in or c tings.

(4) Th' column also l' ts, below the SMR code, an index number for each item in cending numerical sequence, which ' used to locate items in the publication when the Federal stock number and/or reference number ' known

b. Federal Stock Number. Indicat the Federal stock number for the item

c. Description Indicat the Federal item name and any additional description of the item required A part number or other reference number follows the applicable five-digit Federal supply code for manufacturers in parentheses

d Unit of Issue. Indicates the unit used as a b is for issue, e g., ea, pr, ft, yd, etc

e Quantity Incorporated in Unit Pack Indicates the actual quantity contained in the unit pack

f Quantity Incorporated in Unit Indicates the quantity of the item used in the functional group

g Fifteen-Day Organizational Maintenance Allowances

(1) The allowance columns are divided into four subcolumns Indicated in each subcolumn opposite the first appearance of each item is the total quantity of items authorized for the number of equipments supported Subsequent appearances of the same item will have the letters "REF" in the allowance columns Items authorized for use as required but not for initial stockage are identified with an asterisk in the allowance column

(2) The quantitative allowances for organizational level of maintenance represents one initial prescribed load for a 15-day period for the number of equipments supported. Units and organizations authorized additional prescribed loads will multiply the number of pr cribed loads authorized by the quantity of repair parts reflected in the appropriate density column to obtain the total quantity of repair parts authorized

(3) Orga ' ational u 'ts providin m 'ntenan for more than 100 of th e equipments shall determine the total quantity of p ts required by convertin the equip ent quantity to a decimal f tor by placing a dec' al point before the next to l t digit of the numb to indicate hundredths, and ultiplying the dec' al factor by the p ts quantity authorized in the 51–100 allowance column. xa ple, authorized allowance for 1–100 equipments ' 1 ; for 140 equip ents ultiply 12 by 1.40 or 1 .80 rounded off to 17 parts required.

(4) Subsequent chang to allowanc will be l' 'ted follows: No change in the range of it s ' autho ' ed. If additional items are considered nec ary, reco endation should be forwarded to U.S. Army Mobility Equip ent Command for exception or revision to the allowance list. Revisions to the range of ite s authorized will be ade by this Command b ed upon engineering experience, demand data, or TAERS information.

h. Thirty-Day DS/GS Maintenance Allowances.

(1) The allowance columns are divided into three subcolumns. Indicated in each subcolumn, opposite the first appearance of each item, ' the total quantity of items authorized for the number of equipments supported. Subsequent appearanc of the same item will have the letters "REF" in the allowance column Items authorized for use as required but not for initial stockage are identified with an asterisk in the allowance column Items authorized for initial stockage are identified with an asterisk in the allowance column

(2) The quantitative allowance for DS/GS levels of maintenance will represent initial stockage for a 30-day period for the number of equipments supported

(3) Determination of the total quantity of parts required for maintenance of more than 100 of these equipments can be accomplished by converting the equipment quantity to a decimal factor by placing a decimal point before the next to last digit of the number to indicate hundredths, and multiplying the decimal factor by the parts quantity authorized in the 51–100 allowance column Example, authorized allowance for 51–100 equipments is 40, for 150 equipments multiply 40 by 1 50 or 60 parts required

i One-Year Allowances Per 100 Equipments/Contingency Planning Purposes Indicates opposite the first appearance of each item the total quantity required for distribution and contingency planning purposes. The range of items indicates total quantities of all authorized items required to provide for adequate support of 100 equipments for one year

j Depot Maintenance Allowance Per 100 Equipments Indicates opposite the first appearance of each item the total quantity authorized for depot main-

242-451 1052

tenance of 100 equipments. Subsequent appearances of the same item will have the letters "REF" in this column. Items authorized for use but not for initial stockage are identified with an asterisk in the allowance column.

k. Illustration.

(1) *Figure number.* Indicates the figure number of the illustration in which the item is shown.

(2) *Item number.* Indicates the callout number used to reference the item in the illustration.

D-4. Special Information

a. Identification of the usable on codes of this publication are:

Code	Used On
A	ENG DWG D11183-1 thru 14 (Littleford Bros Mdl 251-320).
B	ENG DWG 13212E3630 (Henry Spen Mdl 906936-1).

b. Repair parts mortality has been based on 1,000 hours of operation per year.

c. Parts which require manufacture or assembly at a category higher than that authorized for installation will indicate in the source column the higher category.

d. The following publications pertain to Chassis, Trailer and its components:

LO 5-2330-216-15 Lubrication Order.

D-5. How to Locate Repair Parts

When Federal stock number or reference number is known, use the index (sec. VII of this app.) and find the pertinent Federal Stock Number or reference number. (This index is listed in ascending alpha-numeric sequence cross referenced to an index number in the first parts listing.) Using the index number, refer to the repair parts list and locate the item.

D-6. Abbreviations

Abbreviations	Explanations
C O E	Corps of Engineers.
ea	each
ft	foot (feet).
in	inch (es).
id	inside diameter
lg	long (length)
mtg	mounting
No	number.
od	outside diameter.
rh	right hand.
thd	thread (ed).
w/	with.

D-7. Federal Supply Codes for Manufacturers

Code	Manufacturer
00000	Ordnance Corps.
05861	Eglin Air Force Base.
06721	Owosso Division of Midland Ross Corp.
08294	Boyertown Auto Body Works, Inc.
09386	Budd Co., Automotive Division.
24455	General Electric Co., Lamp Division of Consumer Products Group.
24617	General Motors Corp.
25980	Gray Co. Inc.
36593	Littleford Bros., Inc.
40342	Midland—Ross Corp.
45618	Parker—Hannifin Corp.
52793	Saginaw Products Corp.
53477	Schraders, A. and Son, Division of Scovill Mfg. Co.
56190	Spen, Henry and Co., Inc.
63477	Wagner Electric Co.
70270	Alemite Corp.
70485	Atlantic India Rubber Works, Inc.
73331	Guide Lamp Division of General Motors Corp.
76445	Monroe Auto Equipment Co
78189	Shakeproof Division of Illinois Tool Works, Inc.
78553	Star Marine Engine Works
80347	General Controls Co , Inc
81349	MILITARY SPECIFICATIONS PROMULGATED BY STANDARDIZATION DIV DIRECTORATE OF LOGISTIC SERVICES DSA
81352	Air Force—Navy Aeronautical Specifications
81834	Grote Mfg Co Inc
85611	Keyes—Davis Co , Inc
88044	Aeronautical Standards Group, Depts of Navy and Air Force
91340	Met—Pro, Inc
96906	Military Standards
97403	Army Engineer Research and Development Laboratories
98424	Stimsonite, Division of Elastic Stop Nut Corp of America
98711	Brenner, I G , Co

242-451 1652

Secti I. P C I LOA ALLOWANC

(1) F n s r	(2) Description (ble on code)	(3) Qty inc in unit pack	(4) 15-day org maint. alw (A) 1-5	(B) 6-	(C) 21-	(D) 51-1
	GROUP 06— L CTRICAL SYST M 0609—LIG TS					
5 0-877-3405	LAMP, I CAND C NT: tailli ht " " (24455) 1 2	2	(*)	2	2	4
6 0-577-3435	LIG T, AR R, CLEARANC : blackout, a ber (906) M 35424-1	2	(*)	(*)	(*)	2
6220-727-3288	LIG T, MAR R, CL ARANC : blackout, red (969) MS35424-2	4	(*)	(*)	(*)	2
6220-726-1916	LIG T, ARK R, CL ARANC : red (969) MS35423-2	7	(*)	(*)	(*)	2
6 0-710-2742	LAMP, INCAND C NT: arker li ht (969) M 15570-1251	15	(*)	2	2	4
6220-299-7425	L N , CL ARANC , MARKER LIGHT: a ber (906) MS35421-1	2	(*)	(*)	2	2
6220-729-9296	L N , CL ARANC , MAR R LIG T: blackout, amber (96906) M 35420-1.	2	(*)	(*)	2	2
6220-972-7220	LEN , CL ARANC , AR R LIG T: blackout, red (96) MS35420-2.	4	(*)	(*)	2	2
6220-29 -7426	L N , CL ARANC , MARK R LIG T: red (969) MS35421-2	7	(*)	(*)	2	2
6220-337-6471	STOPLIGHT, TAILLIG T, V ICULAR " " (969) MS51330-1	2	(*)	(*)	2	2
6240-044-6914	LAMP, INCAND SC NT: blackout "A" (73331) 446914	2	(*)	2	2	2
	13—C ASSI WIRING HARN SS					
5325-925-9838	GRO M T, RU R. wiring harn "B" mtg in trailer tongue (70485) 559.	2	(*)	(*)	2	2
2590-105-9878	HARN SS ASS M LY, WIRING "B" (56190) 600380-1	1	(*)	(*)	(*)	2
5340-090-5426	USHING, RU ER. intervehicular r eptacle (00000) 7722333	1	(*)	(*)	2	2
	GROUP 12— RAKES 1202—SERVIC RAKES					
2350-770-9150	SCREW, RAKE SHOE ADJUSTING· lefthand " " (63477) FC22220	2	(*)	(*)	(*)	2
2350-770-9151	SCREW, BRAKE SHOE ADJUSTING· right hand "B" (63477) FC22221.	2	(*)	(*)	(*)	2
5305-105-6870	SCREW, CAP, HEXAGON HEAD· b ke shoe mtg "B" (00000) 181568	2	(*)	(*)	(*)	2
	1204—HYDRAULIC BRAKE SYSTEM					
	BOLT, FITTING· wh l cylinder inlet "B" (63477) 7412079	2	(*)	(*)	(*)	2
530-107-2999	CLAMP, HOSE master cylinder vent "B" (40342) 502913	1	(*)	(*)	(*)	2
340-371-4134	CLIP, SPRING TENSION hydraulic line tee mtg (63477) FC3052	2	(*)	(*)	(*)	2
530-771-4500	CYLINDER ASSEMBLY, WHEEL left hand upper, and right hand lower "B" (63477) FD9920	2	(*)	(*)	(*)	2
530-815-6984	CYLINDER ASSEMBLY, WHEEL right hand upper, and left hand lower (63477) FD9919	2	(*)	(*)	(*)	2
530-737-3260	BLEEDER VALVE, HYDRAULIC BRAKE wheel cylinder "B" (63477) FC11596	4	(*)	(*)	(*)	2
730-309-3852	FITTING, DISTRI UTOR wheel cylinder tube "B" (63477) FC6952	2	(*)	(*)	(*)	2
895-732-1054	GASKET wheel cylinder distributor fitting "B" (63477) 5298653	2	(*)	(*)	(*)	2
720-911-1875	HOSE ASSEMBLY hydraulic tee to wheel "B" (63477) 5276856	2	(*)	(*)	(*)	2
720-809-2750	HOSE, RUBBER m ter cylinder vent "B" (40342) 8365425	1	(*)	(*)	(*)	2
	PLUG, MACHINE THREAD hydraulic lin tee, hexagon head "B" (63477) 8681560	1	(*)	(*)	(*)	2
730-293-7947	PLUG, MACHINE THREAD hydraulic lin tee, hexagon head "B" (04255) 131X4	1	(*)	(*)	(*)	2
730-106-4407	TEE. hydraulic lines, trailor tongue " " (63477) 5167157	1	(*)	(*)	(*)	2
730-1 -5526	TEE hydraulic lines "B" (63477) 10893148	2	(*)	(*)	(*)	2
730-359-0230	OLT, FITTING wheel cylinder inlet "B" (63477) FC11409	4	(*)	(*)	(*)	2
190-773-1513	FITTING, WHEEL "B" (63477) FC2579M	4	(*)	(*)	(*)	2
530-741-1903	FITTING, DISTRI UTOR. wheel cylinder "B" (63477) FC13927	2	(*)	(*)	(*)	2
310-274-4544	WASHER, FLAT wheel cylinder inlet fitting, outer " " (63477) FC1242	4	(*)	(*)	(*)	2
310-741-2088	WASH R, R AR: wheel cylinder inlet fitting, inner " " (00000) 7412088	4	(*)	(*)	(*)	2
310-359-0458	WAS R, FLAT wheel cylinder inlet fitting " " (63477) FC1243	4	(*)	2	2	3
310-820-4450	WA R, FLAT· wheel cylinder inlet fitting " " (63477) FC1242C	4	(*)	2	2	3

242-451 1652

Section II. PRESCRIBED LOAD ALLOWANCE

(1) Federal stock number	(2) Description (useable on code)	(3) Qty inc in unit pack	(4) 15-day org maint. alw (A) 1-5	(B) 6-20	(C) 21-50	(D) 51-100
	1208—AIR BRAKE SYSTEM					
2530-741-1081	FILTER ELEMENT: air filter (40342) N12971	2	(*)	2	2	4
5330-285-5123	WASHER, NONMETALLIC: air filter (40342) 4X509	2	(*)	(*)	(*)	2
4820-107-2998	COCK, DRAIN: reservoir drain "B" (40342) CDAX1-103647	1	(*)	(*)	(*)	2
2530-106-1746	CONNECTOR, AIR BRAKE "B" (63477) 5228623	2	(*)	(*)	(*)	2
4730-595-0083	COUPLING, AIR BRAKE: intervehicular hose "B" (96906) MS35746-1	2	(*)	(*)	(*)	2
2530-106-1747	COUPLING, PIPE: brake connector "B" (63477) 144070	2	(*)	(*)	(*)	2
	GROUP 13—WHEELS 1311—WHEEL ASSEMBLY					
3110-100-5951	BEARING, ROLLER, TAPERED: includes cup "B" (96906) MS19081-112.	4	(*)	(*)	2	2
5306-335-4768	BOLT, RIBBED NECK: drum mtg "B" (09386) 70627E	36	(*)	(*)	2	2
5306-206-1560	BOLT, RIBBED NECK: drum back mtg "B" (09386) 70447E	12	(*)	(*)	2	2
2530-614-4356	GASKET: hub cap "B" (00000) 6144356	2	(*)	(*)	(*)	2
5310-741-1379	NUT, PLAIN, HEXAGON: wheel bearing adjusting (24617) 2275727	4	(*)	(*)	(*)	2
5310-982-4908	NUT, SELF-LOCKING, HEXAGON: drum mtg "B" (09386) 67428E2	36	(*)	(*)	2	2
5310-841-5411	NUT, SINGLE BALL SEAT: wheel mtg, right hand (00000) 537802	6	(*)	(*)	(*)	2
5330-741-1429	SEAL, PLAIN, ENCASED: wheel assembly "B" (24617) 2275398	2	(*)	(*)	2	2
5330-741-1429	SEAL, PLAIN, ENCASED: wheel assembly "A" (00000) 7411429	2	(*)	(*)	2	2
	1313—TIRES, TUBES					
2610-269-7383	INNER TUBE, PNEUMATIC TIRE: 900-20 (96906) MS35393-13	2	(*)	(*)	(*)	2
2610-262-8677	TIRE, PNEUMATIC: 900-20 8 ply (96906) MS35388-16	2	(*)	(*)	(*)	2
	GROUP 15—FRAME, TOWING ATTACHMENTS 1501—FRAME ASSEMBLY					
	RING ASSEMBLY, TIE DOWN: "B" (05861) 48B7796	4	(*)	(*)	(*)	2
	1507—LEVELING JACK					
3120-661-9119	BEARING, SLEEVE: wheel "B" 7411030 (00000)	4	(*)	(*)	(*)	2
	GROUP 16—SPRINGS AND SHOCK ABSORBERS 1604—SHOCK ABSORBER EQUIPMENT					
	SHOCK ABSORBER, DIRECT ACTION: "B" (56190) 500764-1	2	(*)	(*)	(*)	2
5307-105-8692	STUD, LOWER: shock absorber mtg "B" (56190) 301250-1	2	(*)	(*)	(*)	2
5307-105-8693	STUD, UPPER: shock absorber mtg "B" (56190) 301251-1	2	(*)	(*)	(*)	2
	GROUP 22—ACCESSORY ITEMS 2202—ACCESSORY ITEMS					
2540-733-9458	CHAIN, TOWING: safety (00000) 7339458	2	(*)	(*)	(*)	2
2540-106-1984	BLOCK, CENTER: wheel chok "B" (56190) 301209-2	2	(*)	(*)	(*)	2
2540-106-1983	BLOCK, OUTER: wheel chok "B" (56190) 301209-1	12	(*)	2	2	3
5306-011-9409	BOLT, SQUARE NECK: wheel chok block, 5/16-18 thd size, 12 in. lg. (56190) 500737-6.	8	(*)	2	2	3
5310-558-5939	NUT, SELF-LOCKING, HEXAGON: wheel chok block, 5/16-18 thd size "B" (56190) 500737-T.	8	(*)	2	2	3
5310-087-7493	WASHER, FLAT: wheel chok block, 5/16 in. screw size (96906) MS27183	8	(*)	2	2	3

242-451 1652

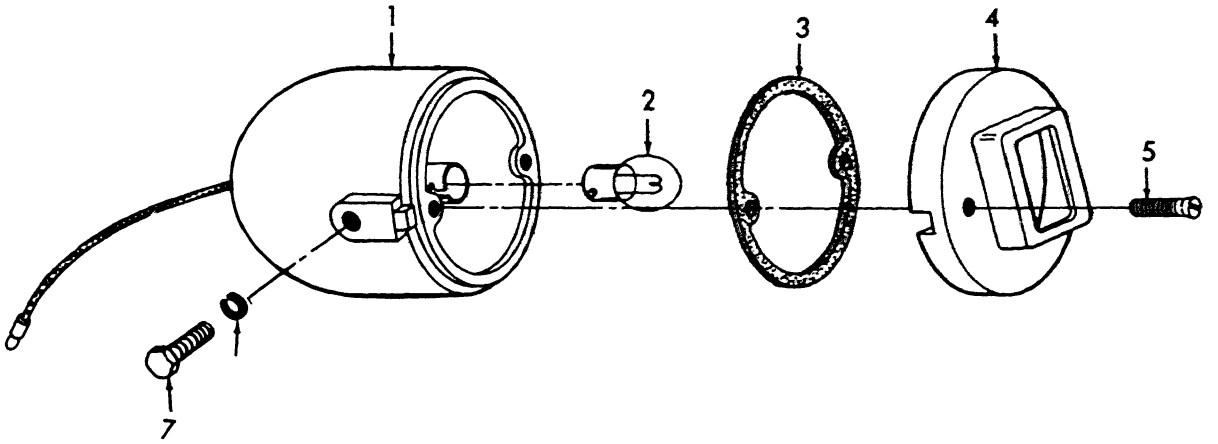

EC 2330-216-15/33

IT M NO.	UNC-TIONAL GROUP	IT M NAME	IT M NO.	FUNC-TIONAL GROUP	IT M NAME	IT M NO.	FUNC-TIONAL GROUP	ITEM NA E
1--------	9	ody bly.	4--------	0609	Door e bly.	6--------	09	W her.
2--------	0609	La p.	5--------	0609	Sc w.	7--------	0	Screw
3--------		G ket.						

Figure D-1. Blackout spotlight "A".

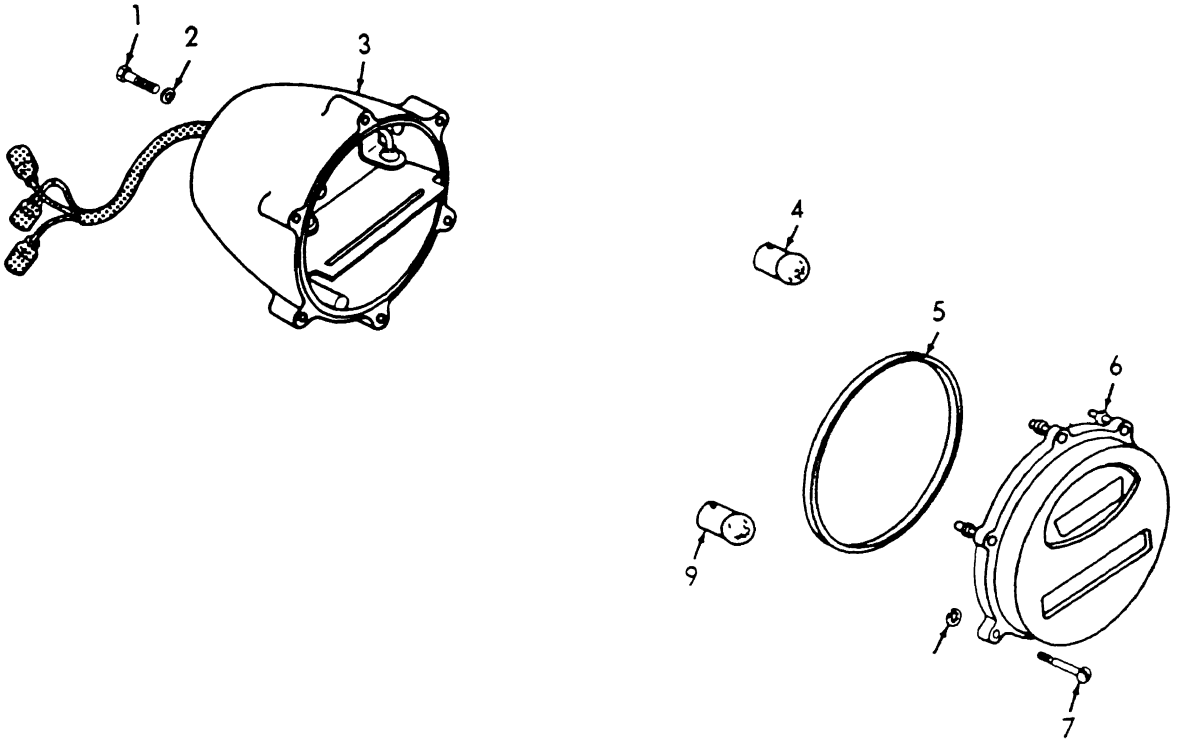

MEC 2330-216-15/34

IT M NO.	FUNC-TIONAL GROUP	IT M NAME	ITEM NO	FUNC-TIONAL GROUP	IT M NAME	ITEM NO	FUNC-TIONAL GROUP	IT M NAME
--------	0609	Screw	4--------	0609	La p	7--------	0609	Sc w.
--------	0609	W her	5--------	0609	Packing.	8--------	0609	Ring.
--------	0609	ody.	6--------	0609	D r mbly.	9--------	0609	Lamp.

F ure D-2. C binati spotl ht.

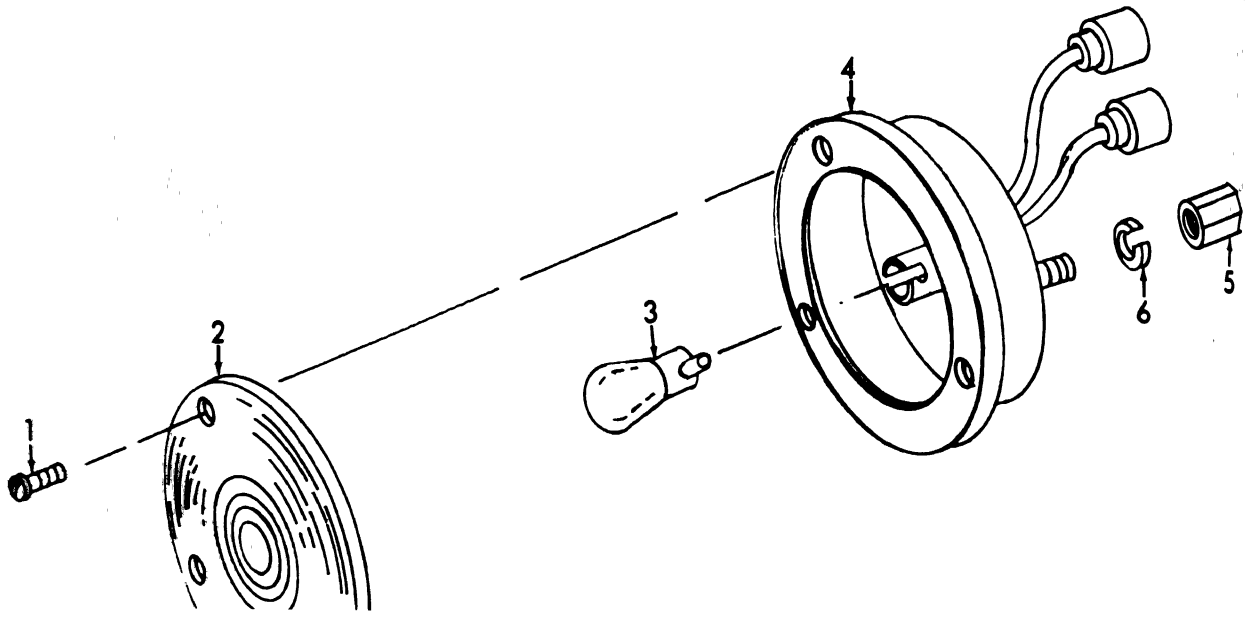

ME 2330-216-15/D-3

Figure No. D-3 Taillight "B"

ITEM NO.	FUNCTIONAL GROUP	ITEM NAME	ITEM NO.	FUNCTIONAL GROUP	ITEM NAME	ITEM NO.	FUNCTIONAL GROUP	ITEM NAME
1--------	0609	Screw.	3--------	0609	Lamp.	5--------	0609	Nut.
2--------	0609	Lens.	4--------	0609	Lamp ay.	6--------	0609	Washer.

Figure D-3. Taillight "B".

242-451 1652

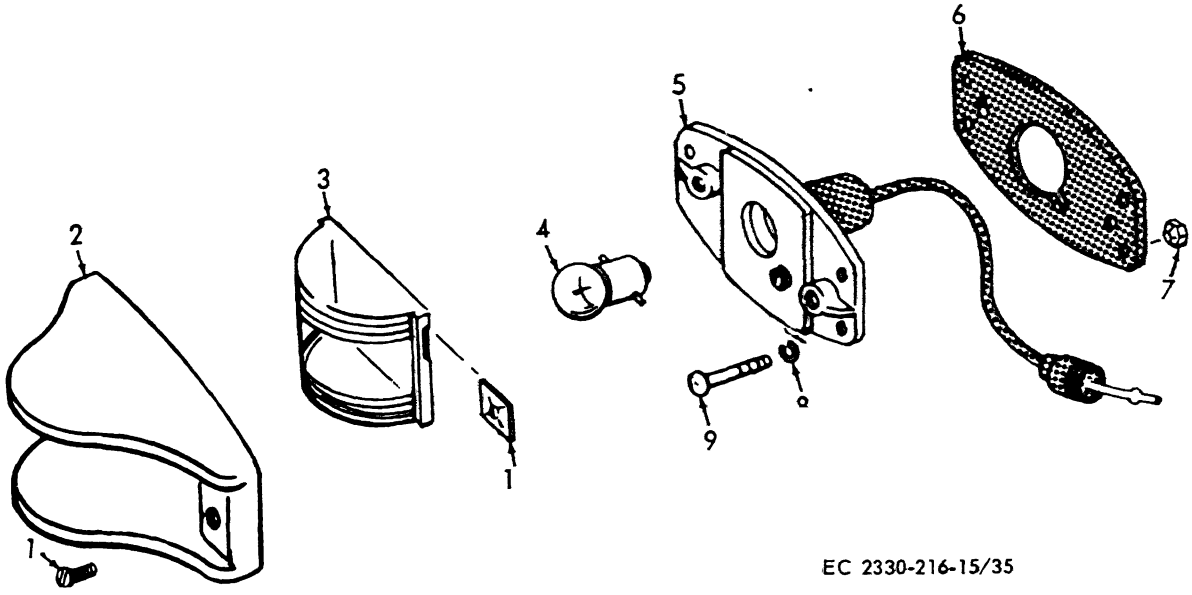

IT M NO.	FUNC-TIONAL GROUP	IT M NAM	IT M NO.	FUNC-TIONAL GROUP	IT M NAME	IT M NO.	FUNC-TIONAL GROUP	ITEM NAME
1--------	0609	Screw.	5--------	0609	Plate.	8--------	0609	W her
2--------	0609	Door.	6--------	0609	Felt.	9--------	0609	Screw
3--------	0609	Lens	7--------	0609	Nut.	10-------	0609	Nut.
4--------	0609	Lamp.						

Figure D-4. Clearance lights.

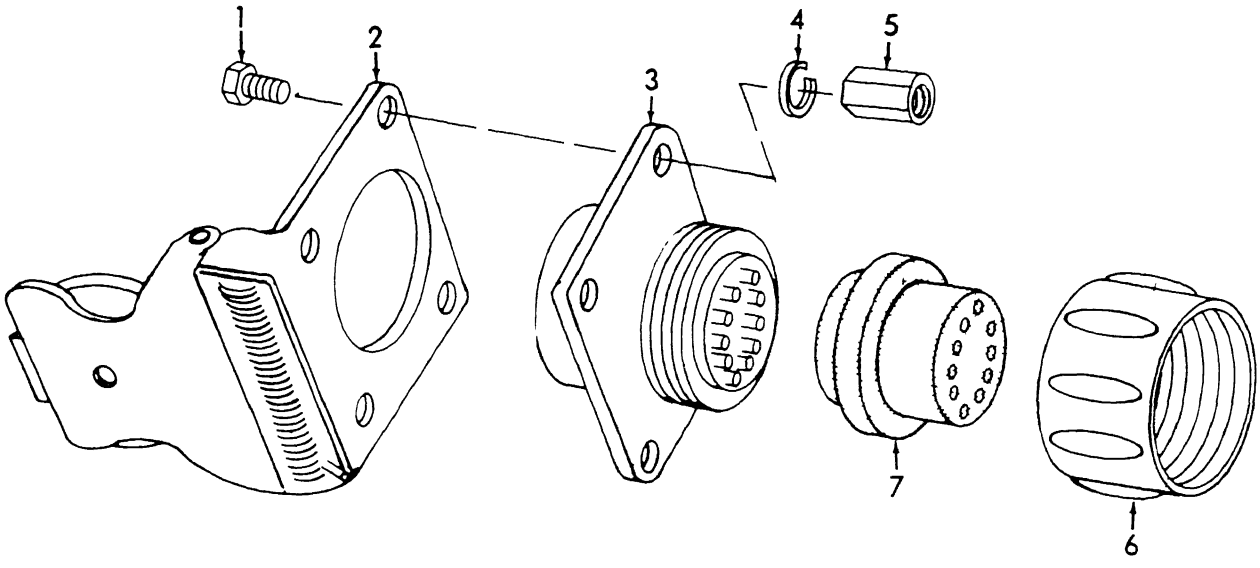

Fi ure No. D-5 Intervehicular Receptacle

IT M NO.	FUNC-TIONAL GROUP	IT M NAME	IT M NO.	FUNC-TIONAL GROUP	IT M NAME	ITEM NO.	FUNC-TIONAL GROUP	ITEM NAME
1--------	0613	Screw.	4--------	0613	W her.	6--------	13	Nut
2--------	0613	Cover ay	5--------	0613	Nut.	7--------	0613	hing
3--------	0613	Connector.						

Figure D-5. Intervehicular r ptacle.

242-451 1652

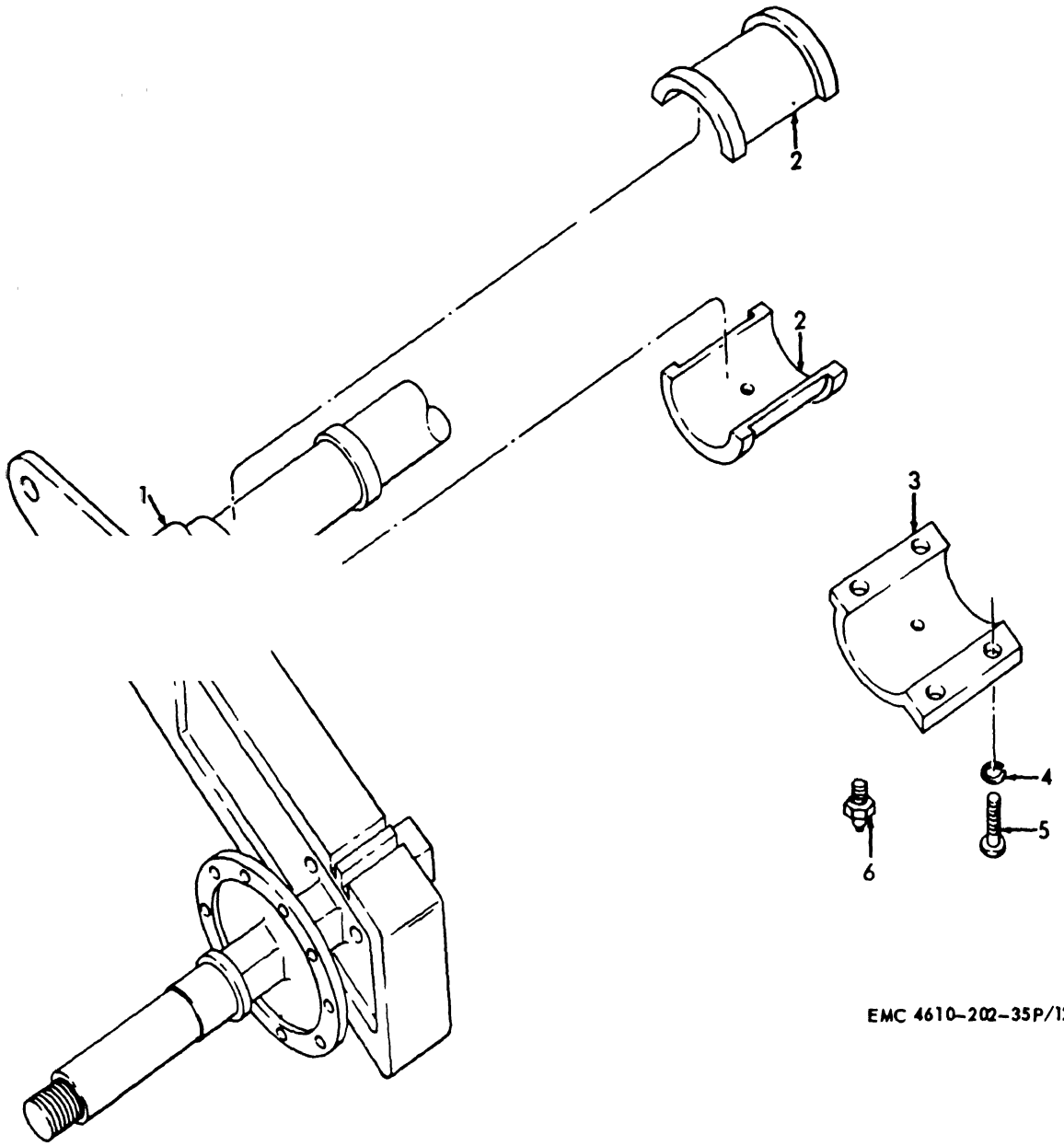

ITEM NO.	FUNCTIONAL GROUP	ITEM NAME	ITEM NO.	FUNCTIONAL GROUP	ITEM NAME	ITEM NO.	FUNCTIONAL GROUP	ITEM NAME
1	1108	Axle Assembly.	3	1108	Housing.	5	1108	Screw.
2	1108	Bearing.	4	1108	Washer.	6	1108	Fitting.

Figure D-6. Axle beam.

242-451 1652

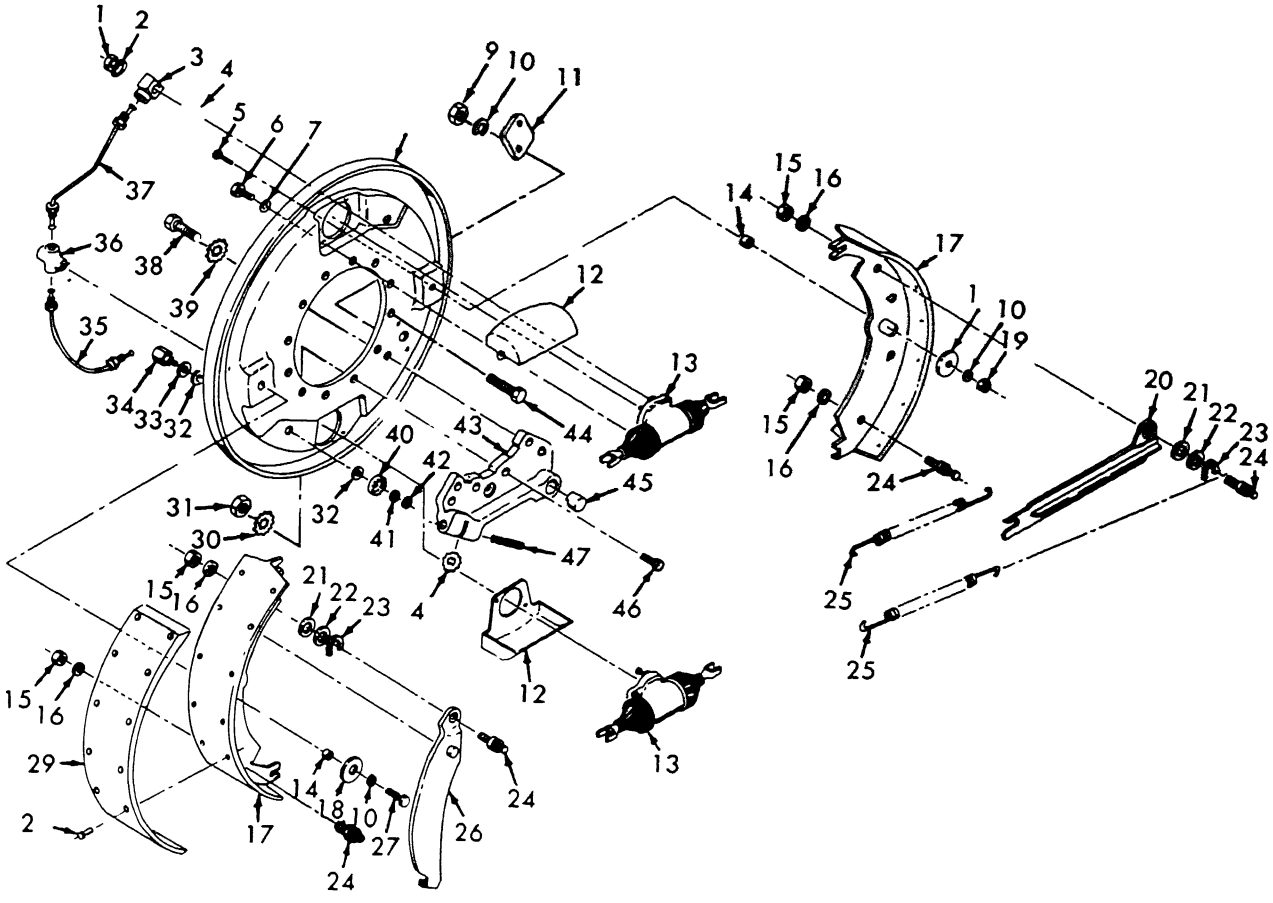

M 2330-216-15/D-7

ITEM NO	FUNCTIONAL GROUP	ITEM NAME	ITEM NO	FUNCTIONAL GROUP	ITEM NAME	ITEM NO	FUNCTIONAL GROUP	ITEM NAM
1	1204	Bolt	17	1202	Shoe	33	1202	W her
2	1204	Washer	18	1202	W her	34	1202	Stud
3	1204	Fitting	19	1202	Nut	35	1204	Tube ay
4	1204	Washer	20	1202	Link	36	1204	Fitting
5	1202	Bolt	21	1202	W her	37	1204	Tube ay
6	1204	Screw	22	1202	W her	38	1202	Screw.
7	1204	Washer	23	1202	W her	39	1202	W her
8	1202	Plate	24	1202	Pin	40	1202	Gear
9	1202	Nut	25	1202	Spring	41	1202	Washer
10	1202	Washer	26	1202	Lever	42	1202	Nut
11	1202	Cover plate	27	1202	Screw	43	1202	Support
12	1204	Shield	28	1202	Rivet	44	1202	Screw.
13	1204	Cylinder ay	29	1202	Lining	45	1202	Pin.
14	1202	Sleeve	30	1202	W her	46	1202	Screw.
15	1202	Nut	31	1202	Nut	47	1202	Screw.
16	1202	Washer	32	1202	W her.	48	1202	Wheel.

Figure D-7. Brake component

242-451 1652

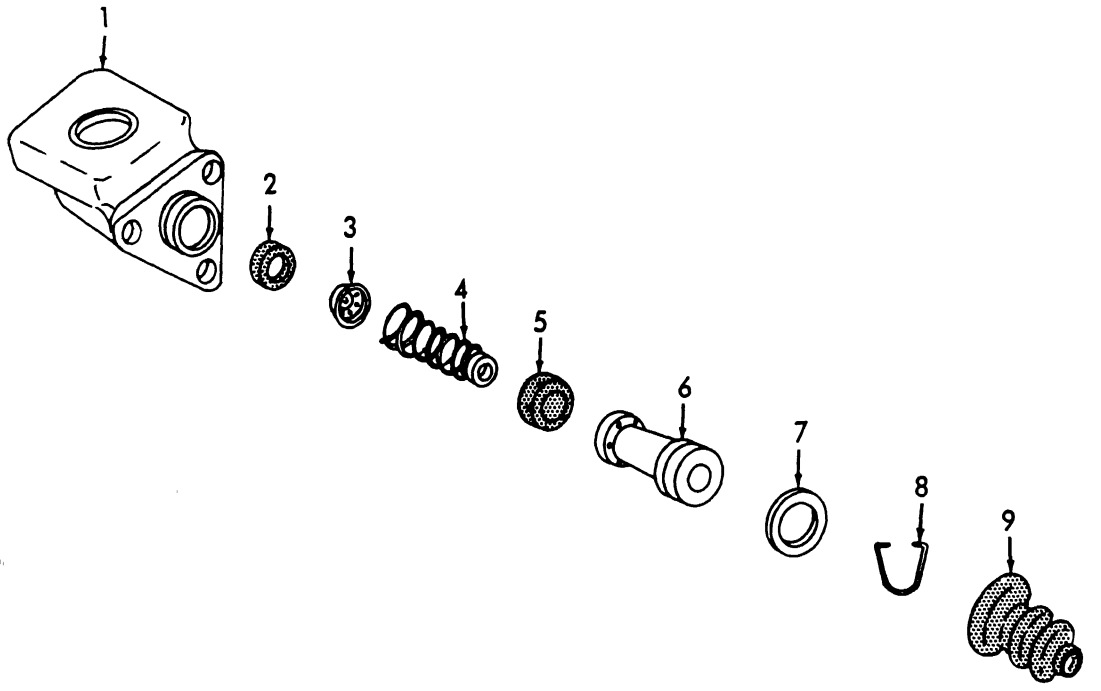

MEC 2330-216-15/38

ITEM NO.	FUNCTIONAL GROUP	ITEM NAME	ITEM NO.	FUNCTIONAL GROUP	ITEM NAME	ITEM NO.	FUNCTIONAL GROUP	ITEM NAME
1	1204	Body.	4	1204	Spring.	7	1204	Washer.
2	1204	Washer.	5	1204	Cup.	8	1204	Ring.
3	1204	Valve ay.	6	1204	Piston ay.	9	1204	Boot.

Figure D-8. Master cylinder.

242-451 1652

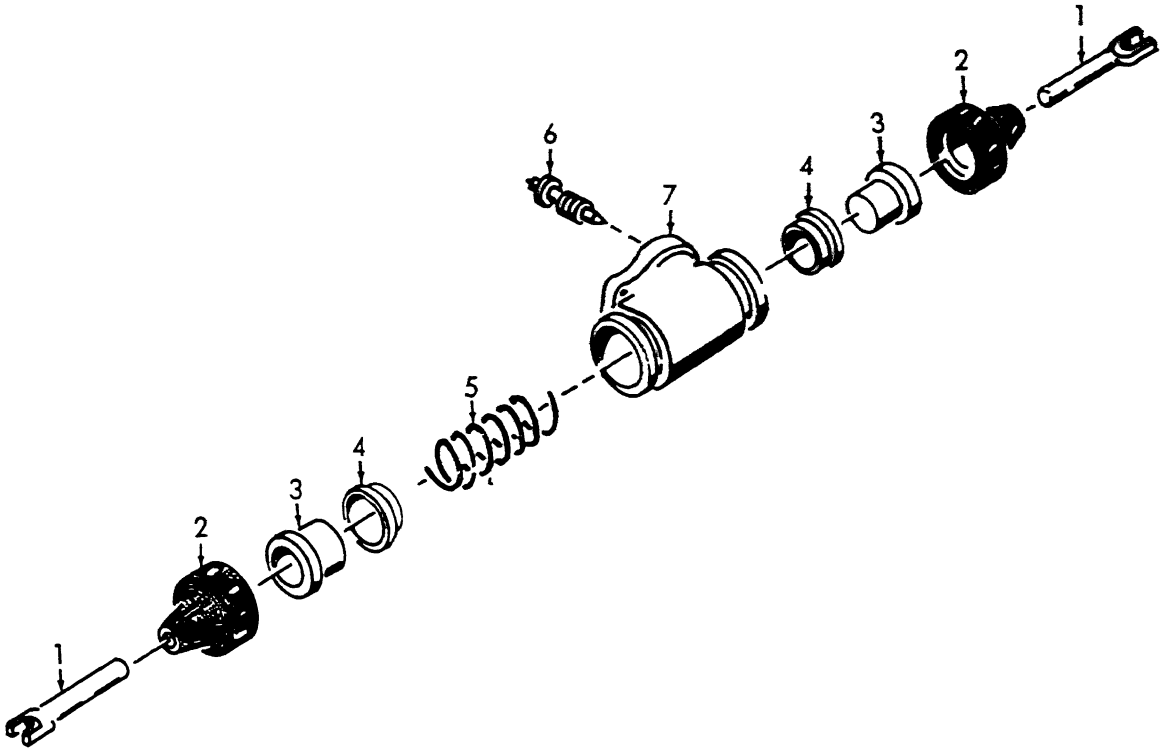

MEC 2330-216-15/39

ITEM NO	FUNCTIONAL GROUP	ITEM NAME	ITEM NO	FUNCTIONAL GROUP	ITEM NAME	ITEM NO	FUNCTIONAL GROUP	ITEM NAME
1	1204	Link	4	1204	Cup	6	1204	Bleeder valve
2	1204	Boot	5	1204	Spring	7	1204	Body
3	1204	Piston ay						

Figure D-9 Wheel cylinder

242-451 1652

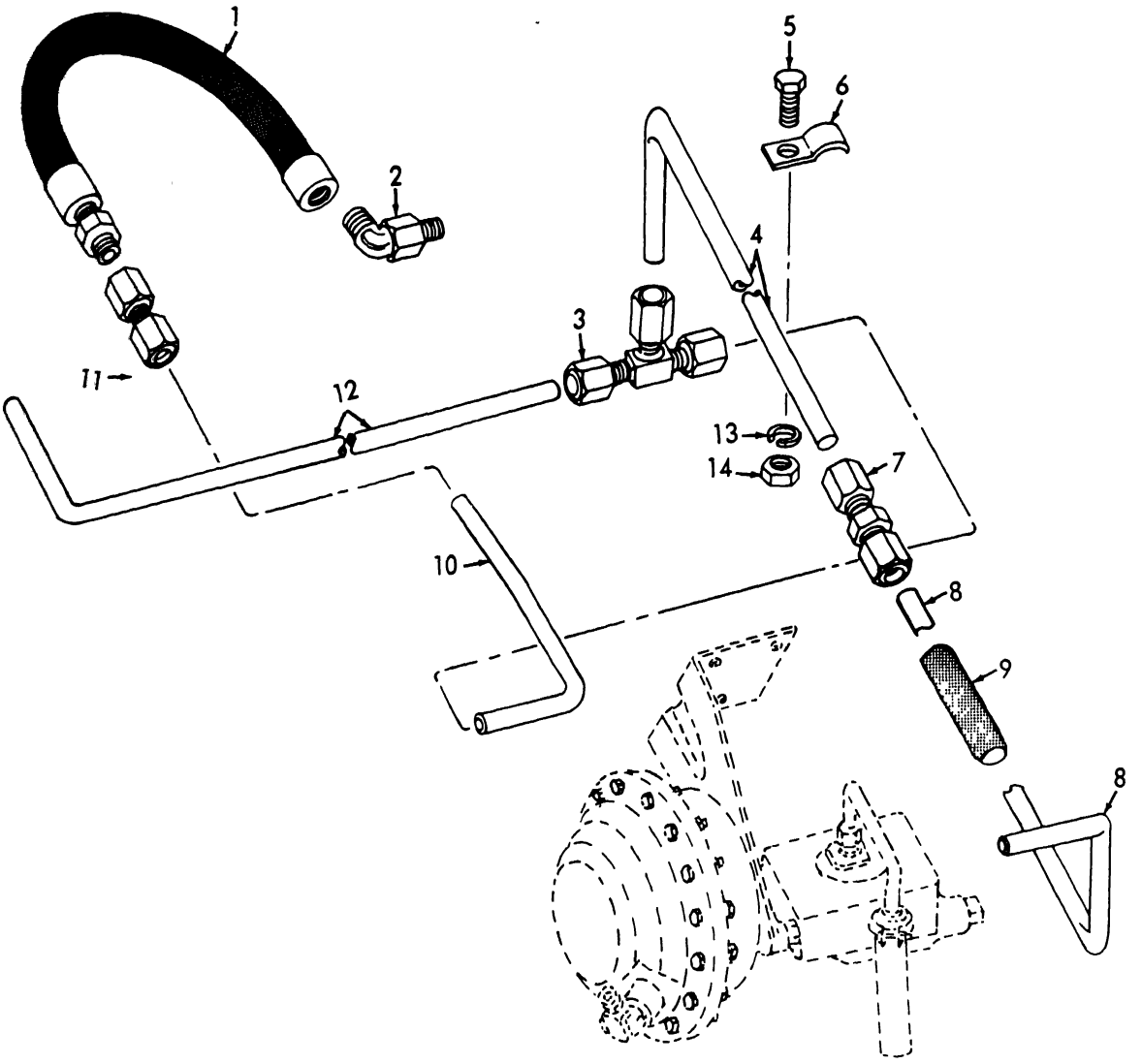

MEC 2330-216-15/40

ITEM NO.	FUNCTIONAL GROUP	ITEM NAME	ITEM NO.	FUNCTIONAL GROUP	ITEM NAME	ITEM NO.	FUNCTIONAL GROUP	ITEM NAME
1	1204	Hose ay.	6	1204	Clip.	11	1204	Adapter.
2	1204	Elbow.	7	1204	Nipple	12	1204	Tube.
3	1204	Tee.	8	1204	Tube.	13	1204	Washer
4	1204	Tube.	9	1204	Tube.	14	1204	Nut.
5	1204	Screw	10	1204	Tube.			

Figure D-10. Hydraulic brake lines and fittings "A".

242-451 1652

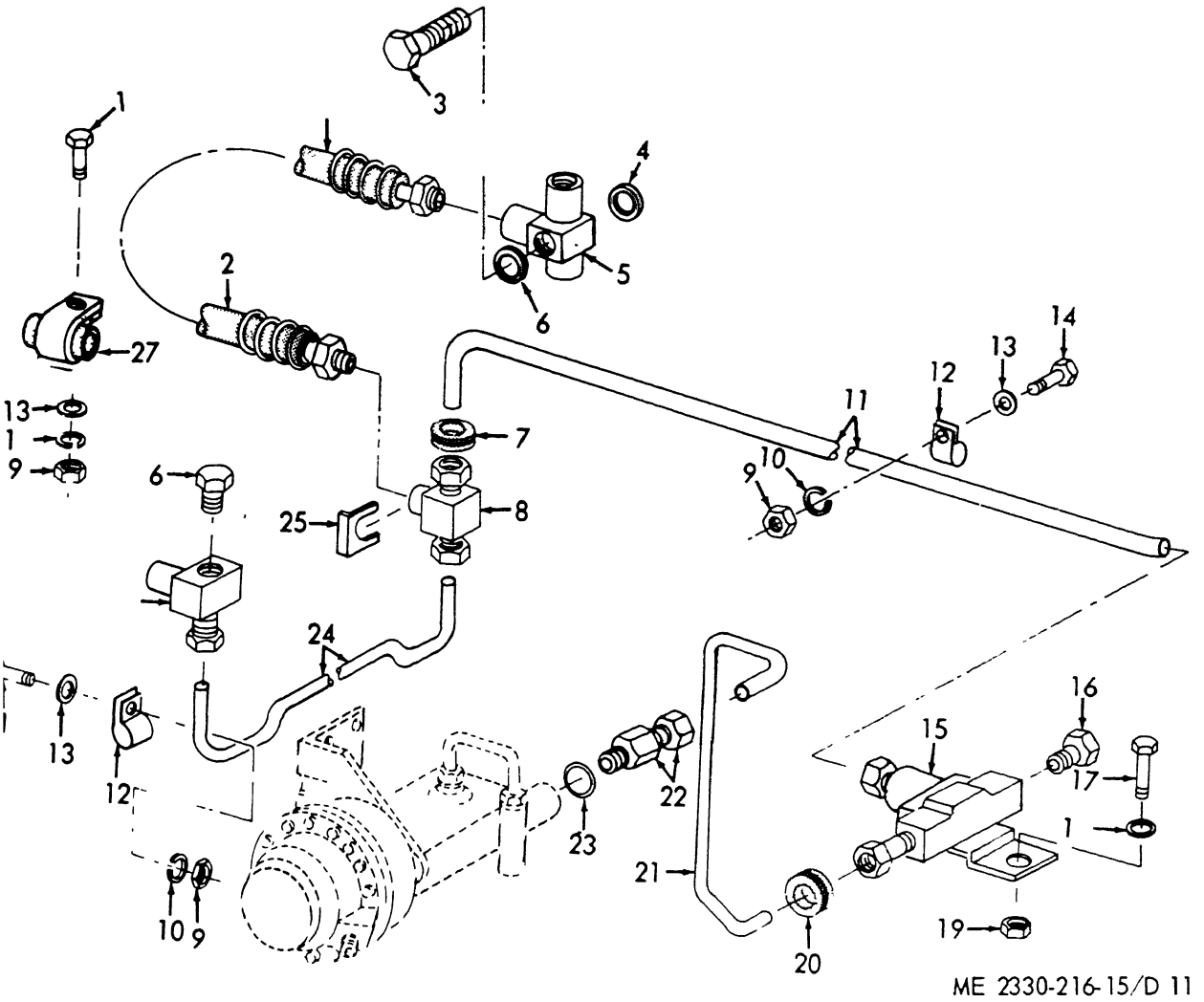

Figure No. D-11 Hydraulic Brake Lines And Fittings "B"

T M NO	FUNC-TIONAL GROUP	ITEM NAME	ITEM NO	FUNC-TIONAL GROUP	ITEM NAME	ITEM NO	FUNC-TIONAL GROUP	ITEM NAME
-------	1204	Bolt	10-------	1204	Washer	19-------	1204	Nut
-------	1204	Hose ay	11-------	1204	Tube	20-------	1204	Grommet
-------	1204	Bolt	12-------	1204	Clamp	21-------	1204	Tube
-------	1204	W her	13-------	1204	Washer	22-------	1204	Connector ay
-------	1204	Fitting	14-------	1204	Screw	23-------	1204	Washer
-------	1204	G ket	15-------	1204	Tee	24-------	1204	Tube
-------	1204	Grommet	16-------	1204	Plug	25-------	1204	Clip
-------	1204	Tee	17-------	1204	Screw	26-------	1204	Plug
-------	1204	Nut	18-------	1204	Washer	27-------	1204	Clamp

Figure D-11 Hydraulic brake lines and fittings "B"

242-451 1652

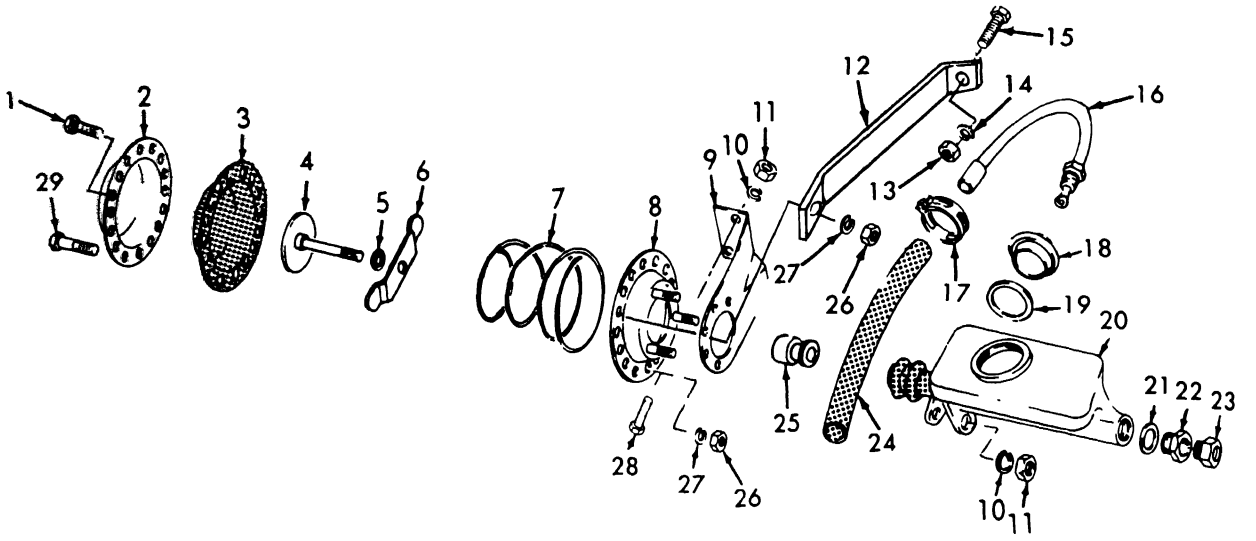

Figure No. D-12 Air Chamber And Master Cylinder

ITEM NO.	FUNCTIONAL GROUP	ITEM NAME	ITEM NO	FUNCTIONAL GROUP	ITEM NAME	ITEM NO	FUNCTIONAL GROUP	ITEM NAME
1	1208	Bolt.	11	1208	Nut.	21	1204	Washer.
2	1208	Cover.	12	1208	Support.	22	1204	Inverted nut.
3	1208	Diaphragm	13	1208	Nut.	23	1204	Adapter.
4	1208	Rod.	14	1208	Washer	24	1204	Hose
5	1208	Packing.	15	1208	Bolt.	25	1208	Collar
6	1208	Cup.	16	1204	Tube ay.	26	1208	Nut
7	1208	Spring.	17	1204	Clamp.	27	1208	Washer
8	1208	Body.	18	1204	Cap.	28	1208	Screw
9	1208	Bracket.	19	1204	Washer.	29	1208	Bolt
10	1208	Washer	20	1204	Cylinder ay			

Figure D-12 Air chamber and master cylinder

242-451 1652

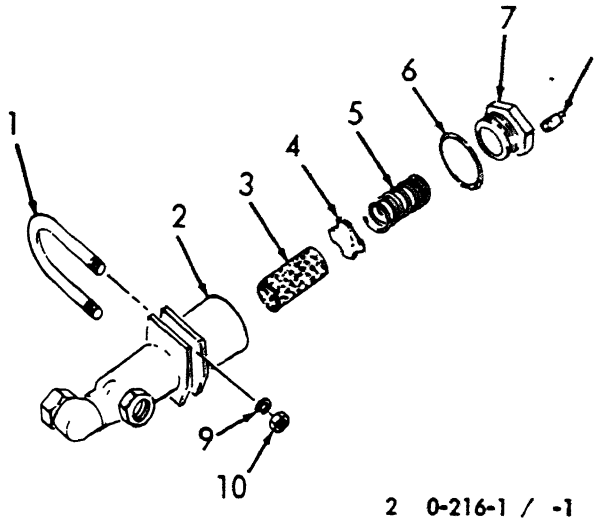

2 0-216-1 / -1

Fi ur No. D-13 rak Air Filt r

IT NO.	FUNC-TIONAL GROUP	IT M NAM	IT M NO.	FU C-TIONAL GROUP	IT M NAM	IT NO.	FUNC-TIONAL GROUP	IT M NAME
1--------	1208	olt.	5--------	12	sp .	8--------	1208	Plug.
2--------	1208	ody.	6--------	1208	W her.	9--------	1208	W her.
3--------	1208	Filter ele ent.	7--------	12	Adapter.	10-------	1208	Nut.
4--------	1208	W her						

Figure D-13. rake air filter.

242-451 1652

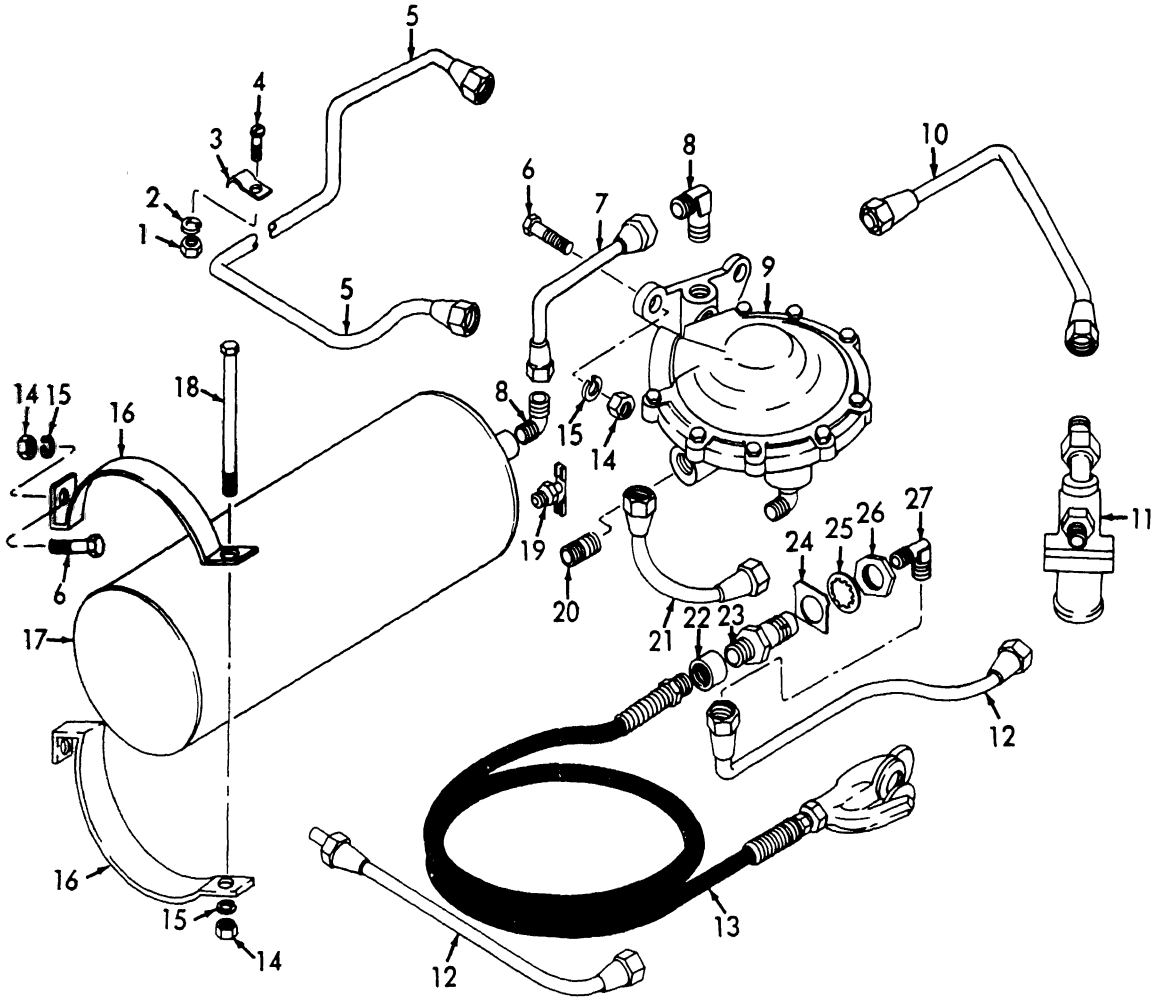

MEC 2330-216-15/43

ITEM NO	FUNCTIONAL GROUP	ITEM NAME	ITEM NO.	FUNCTIONAL GROUP	ITEM NAME	ITEM NO	FUNCTIONAL GROUP	ITEM NAME
1	1208	Nut.	11	1208	Air filter.	19	1208	Cock
2	1208	Washer.	12	1208	Tube.	20	1208	Adapter.
3	1208	Clamp.	13	1208	Hose and coupling assembly	21	1208	Tube assembly.
4	1208	Screw.				22	1208	Coupling
5	1208	Tube assembly				23	1208	Connector
6	1208	Screw.	14	1208	Nut.	24	1208	Plate
7	1208	Tube	15	1208	Washer	25	1208	Washer.
8	1208	Elbow.	16	1208	Clamp	26	1208	Nut.
9	1208	Valve.	17	1208	Reservoir.	27	1208	Elbow.
10	1208	Tube assembly.	18	1208	Screw.			

Figure D-14. Brake reservoir and lines "A".

242-451 1652

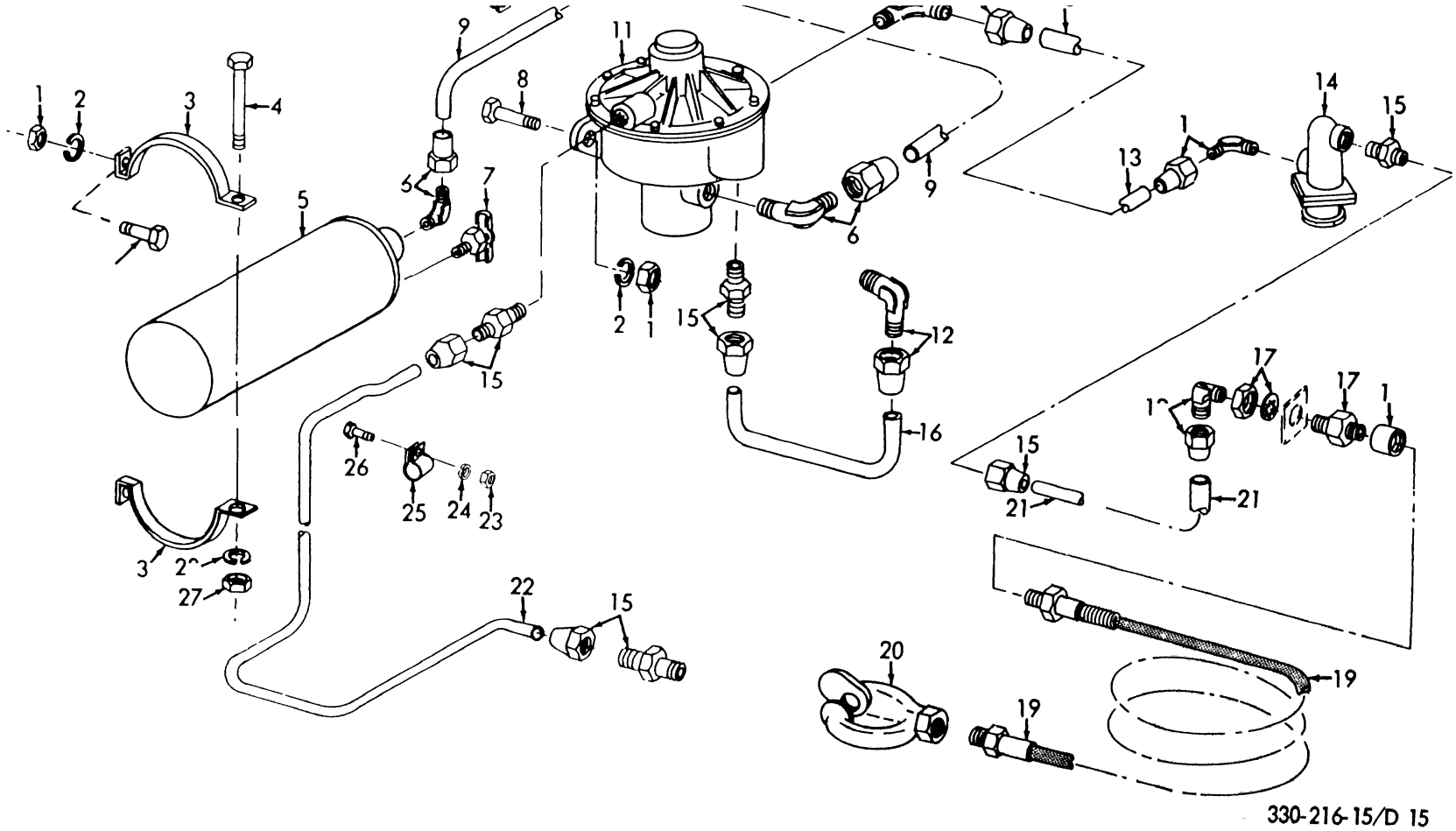

Figure No. D-15 rake eservoir And Lines " "

ITEM NO.	FUNCTIONAL GROUP	ITEM NAME	ITEM NO	FUNCTIONAL GROUP	ITEM NAME	ITI M NO.	FUNCTIONAL GROUP	IT M NAM	ITE NO.	FUNCTIONAL GTOUP	ITE NAME
1--------	1208	Nut	8--------	1208	Screw	15-------	1208	Adapter.	22-------	1208	Tube.
2--------	1208	Washer	9--------	1208	Tube	16-------	1208	Tube.	23-------	1208	Nut.
3--------	1208	Clamp	10-------	1208	Clamp	17-------	1208	Connector.	24-------	1208	W her.
4--------	1208	Screw	11-------	1208	Valve	18-------	1208	Coupling.	25-------	1208	Cla p.
5--------	1208	Reservoir	12-------	1208	Elbow	19-------	1208	Hose ay.	26-------	1208	crew.
6--------	1208	Elbow	13-------	1208	Tube	20-------	1208	Coupling.	27-------	1208	Nut.
7--------	1208	Cock	14-------	1208	Air filter	21-------	1208	Tube.	28-------	1208	W her.

Figure D-15 Brake reservoir and lines "B"

242-451 1652

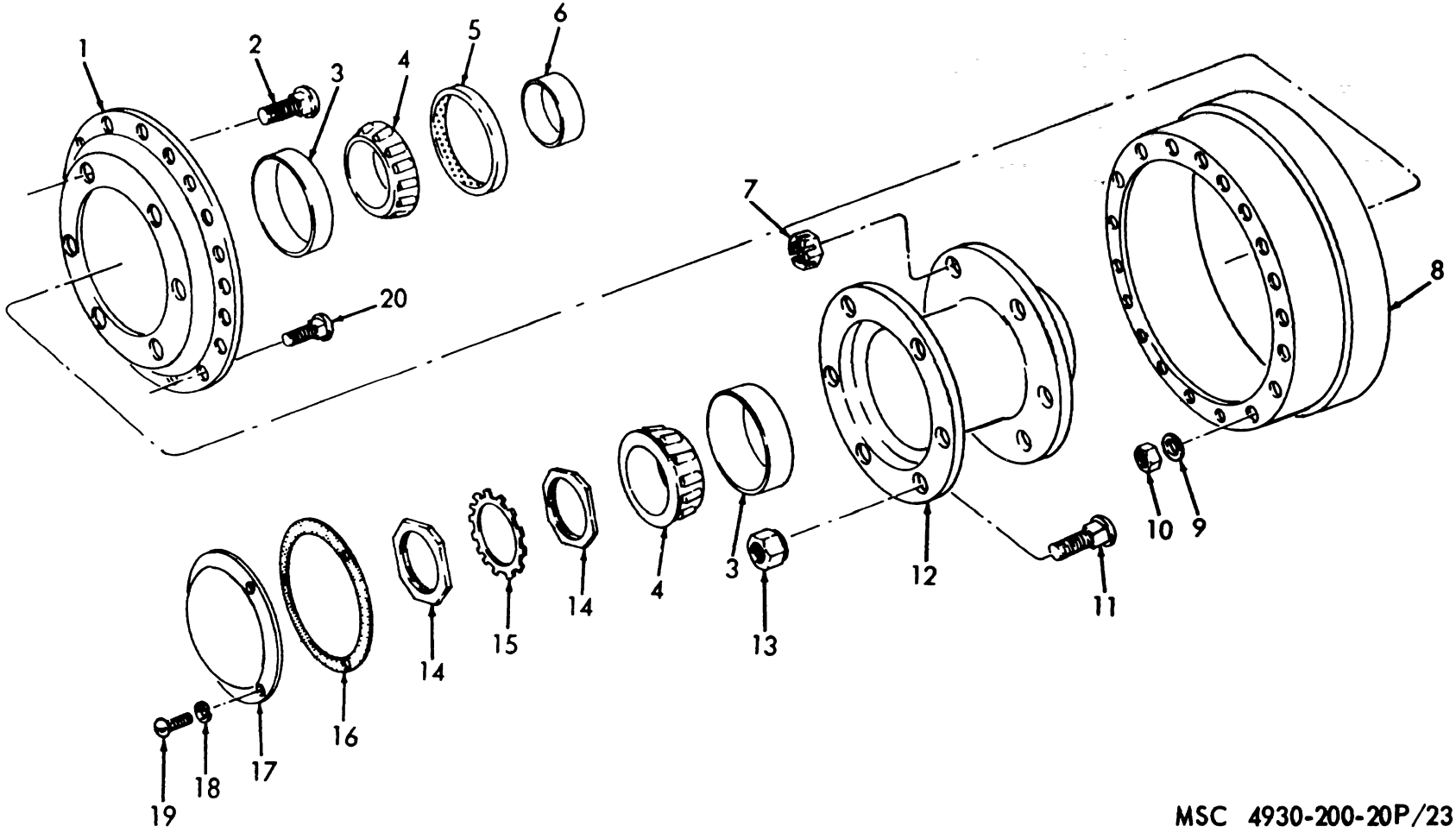

MSC 4930-200-20P/23

ITEM NO.	FUNCTIONAL GROUP	ITEM NAME	ITEM NO	FUNCTIONAL GROUP	ITEM NAME	ITEM NO.	FUNCTIONAL GROUP	ITEM NAME
1	1311	Back	8	1311	Drum.	15	1311	Washer.
2	1311	Bolt.	9	1311	Washer.	16	1311	Gasket.
3	1311	Cup.	10	1311	Nut.	17	1311	Cap.
4	1311	Cone.	11	1311	Stud.	18	1311	Washer.
5	1311	Seal.	12	1311	Hub.	19	1311	Screw.
6	1311	Spacer.	13	1311	Nut.	20	1311	Bolt.
7	1311	Nut.	14	1311	Nut.			

Figure D-16. Wheel hub and bearings.

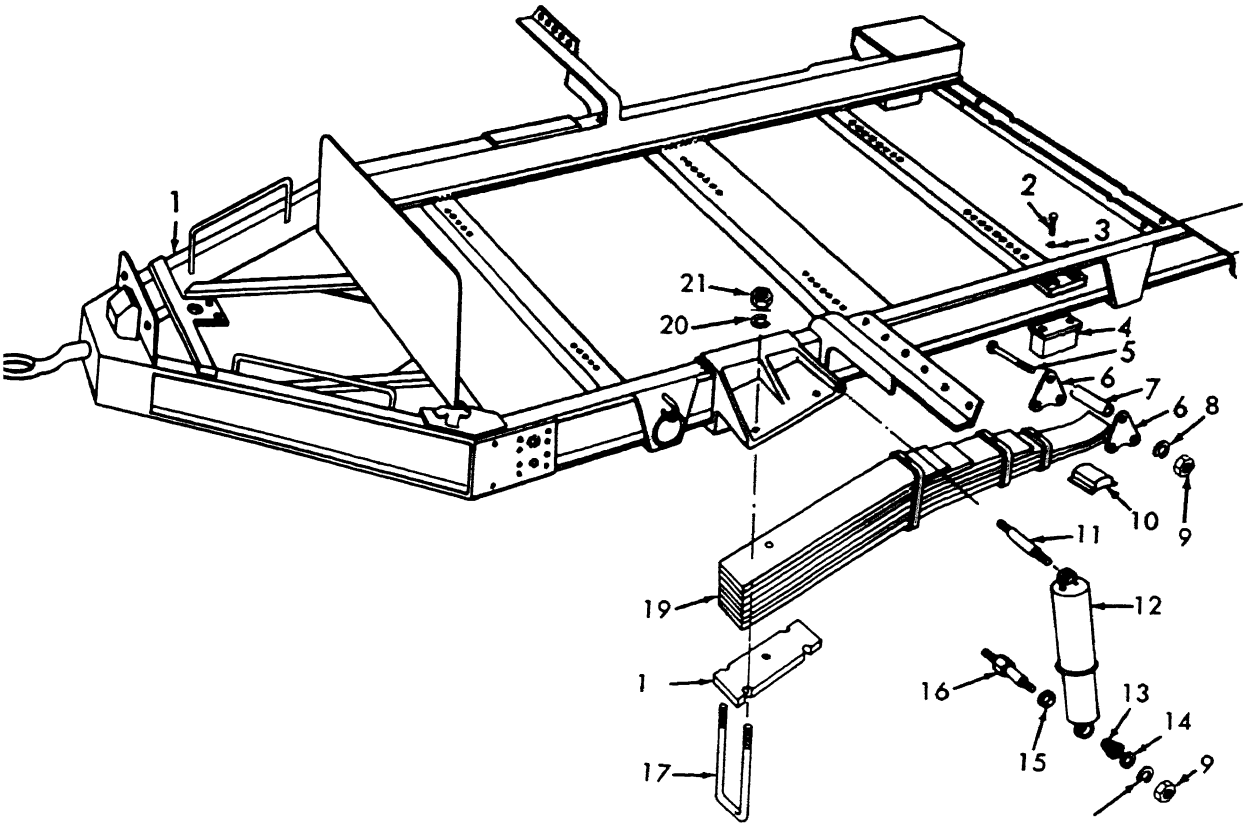

23 0-21 -15/ -17

Fi ur No. D-17 Fra "A", Sprin s And Shock Absorb rs

IT M NO	FUNC-TIONAL GROUP	ITEM NAME	IT M NO	FUNC-TIONAL GROUP	ITEM NAME	IT M NO	FUNC-TIONAL GROUP	IT M NAME
-------	1501	Frame ay	8--------	1604	W her	15-------	1604	W her.
-------	1601	Screw	9--------	1601	Nut	16-------	1604	Stud
-------	1601	Washer	9--------	1604	Nut	17-------	1601	olt
-------	1601	Bumper	10-------	1601	Pad	18-------	1601	Clamp
-------	1601	Screw	11-------	1604	Stud	19-------	1601	Spring ay
-------	1601	Plate	12-------	1604	Shock absorber	20-------	1601	W her
-------	1601	Spacer	13-------	1604	Grommet	21-------	1601	Nut
-------	1601	W her	14-------	1604	W her			

Figure D-17. Frame "A", springs and shock absorbers

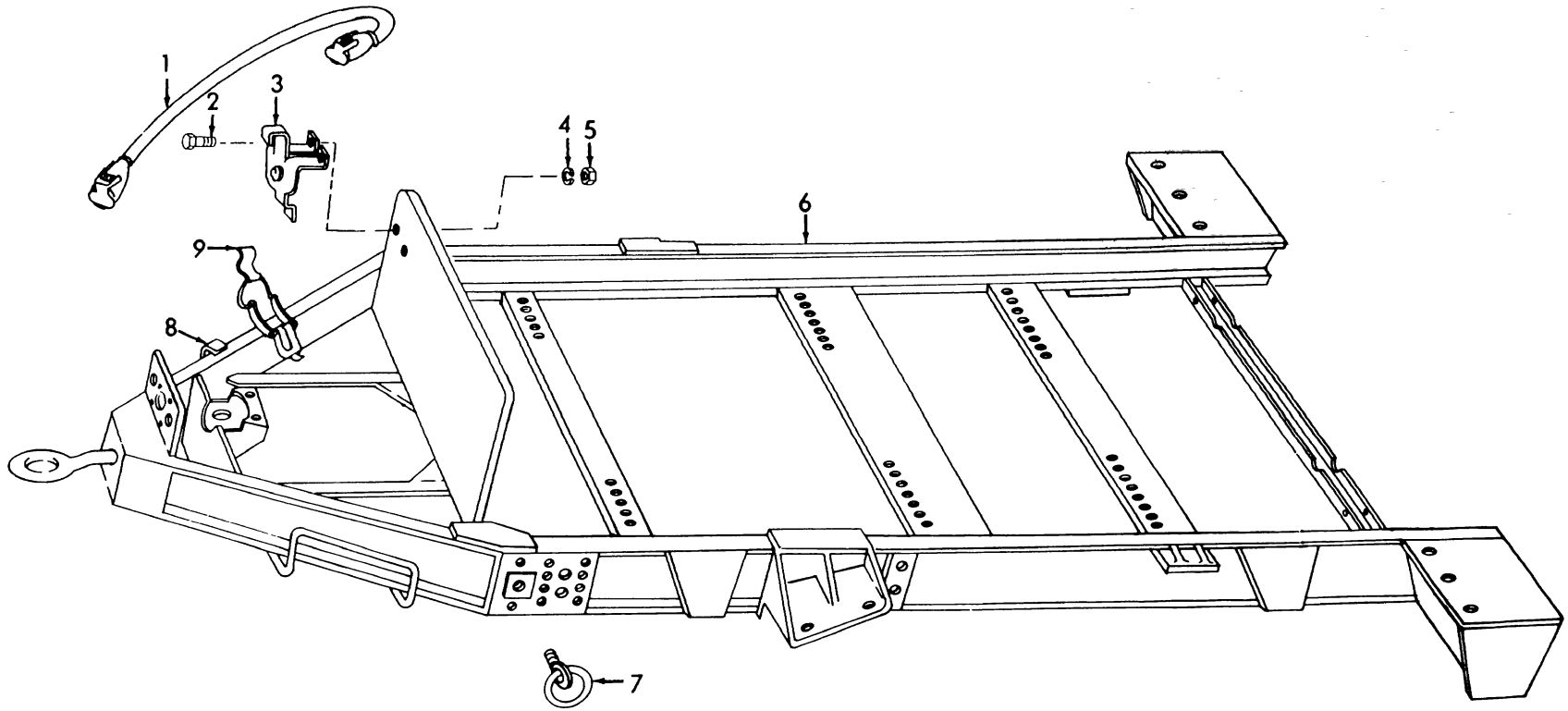

Figure No. D-18 Frame "B" Cable And Lifting Eye

ME 2330-216-15/D 18

ITEM NO.	FUNCTIONAL GROUP	ITEM NAME	ITEM NO.	FUNCTIONAL GROUP	ITEM NAME	ITEM NO.	FUNCTIONAL GROUP	ITEM NAME
1	0613	Cable ay.	4	1208	Washer.	7	1501	Ring ay.
2	1208	Bolt.	5	1208	Nut.	8	1501	Retainer.
3	1208	Bracket.	6	1501	Frame ay.	9	1501	Bracket.

Figure D-18. Frame "B", cable and lifting eye.

451 1652

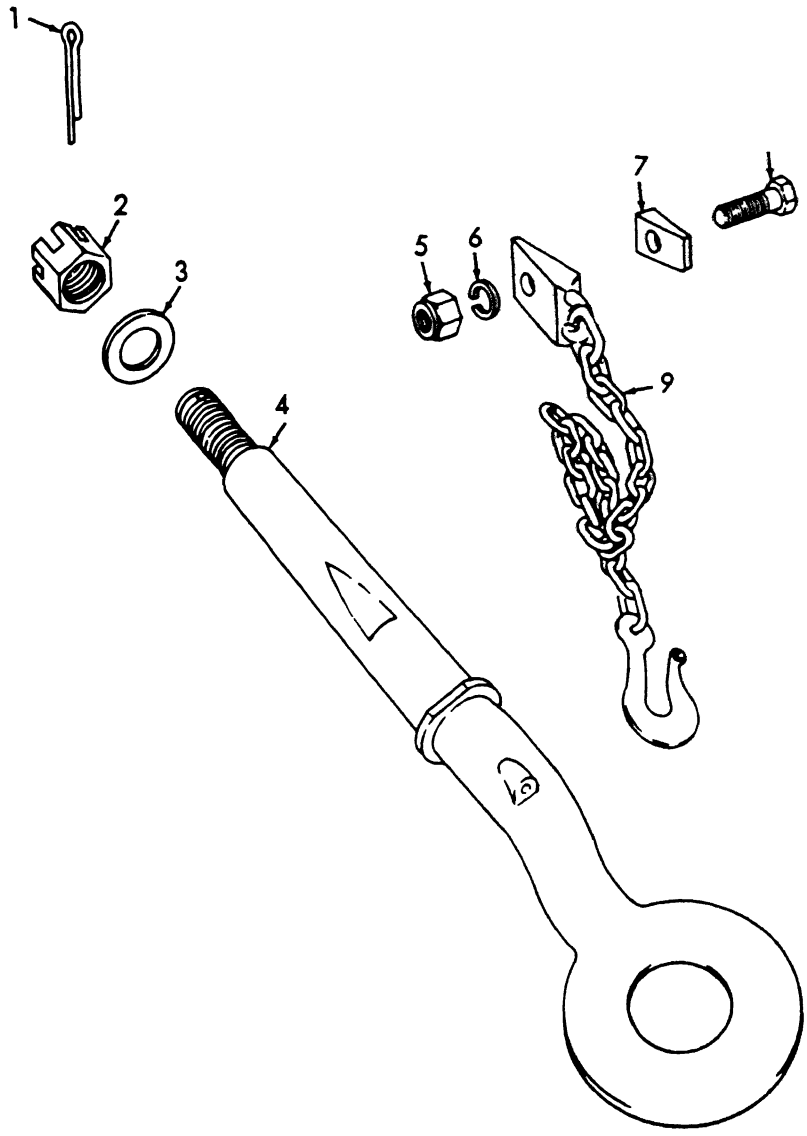

MEC 2330-216-15/47

TEM NO	FUNC-TIONAL GROUP	ITEM NAME	ITEM NO	FUNC-TIONAL GROUP	ITEM NAME	ITEM NO	FUNC-TIONAL GROUP	ITEM NAME
-----	1503	Pin	4--------	1503	Lunette	7--------	2202	W her
-----	1503	Nut	5 -------	2202	Nut	8--------	2202	Screw
-----	1503	Washer	6--------	2202	W her	9--------	2202	Chain

Figure D-19 Lunette and safety chain

242-451 1652

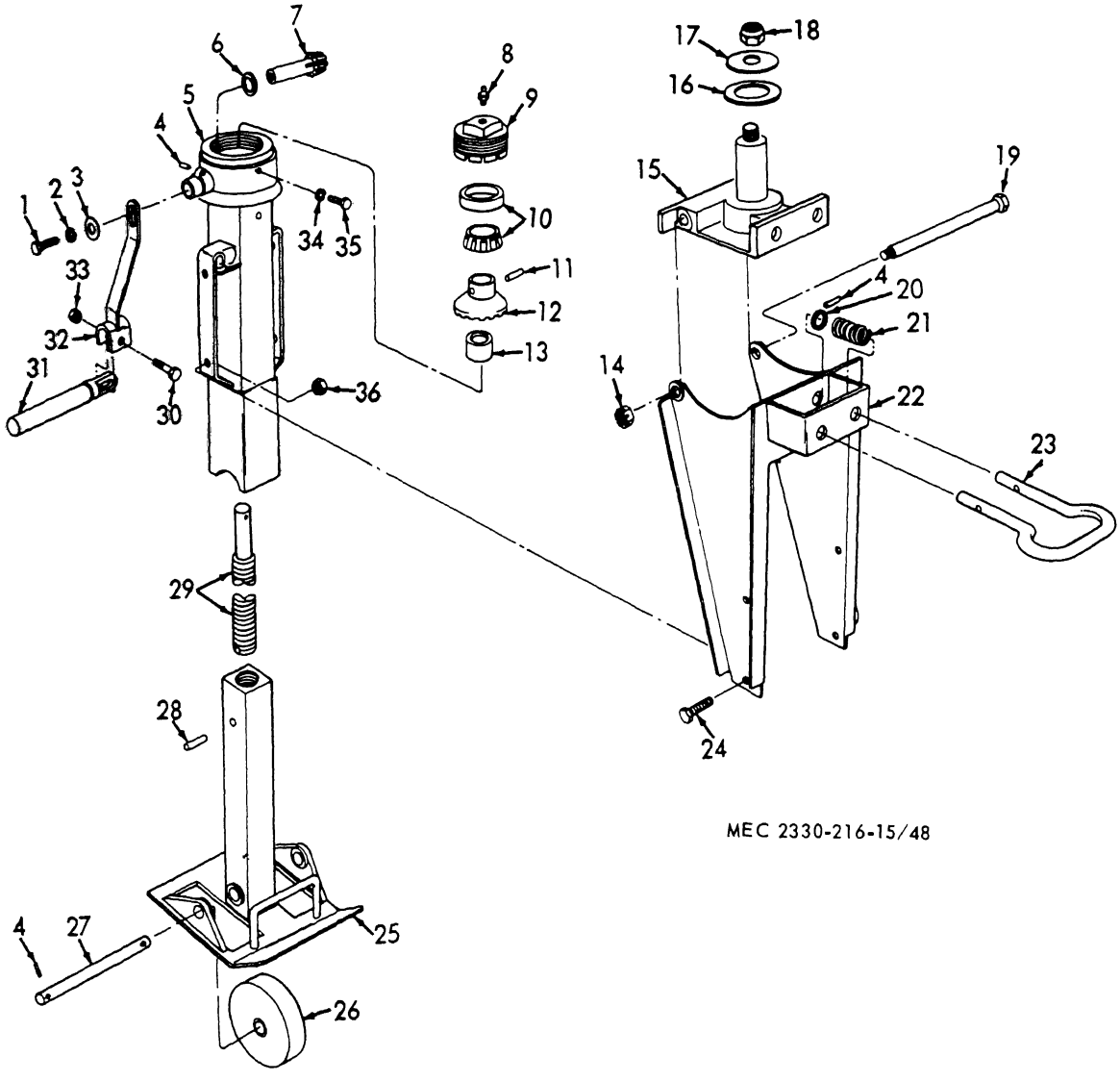

ITEM NO.	FUNCTIONAL GROUP	ITEM NAME
1	1507	Bolt
2	1507	Washer.
3	1507	Washer
4	1507	Pin
5	1507	Head assembly.
6	1507	Washer.
7	1507	Gear.
8	1507	Fitting
9	1507	Cap.
10	1507	Bearing.
11	1507	Pin.
12	1507	Gear
13	1507	Spacer.
14	1507	Nut.
15	1507	Swivel and spindle.
16	1507	Washer.
17	1507	Washer.
18	1507	Nut
19	1507	Bolt.
20	1507	Washer
21	1507	Spring
22	1507	Leg.
23	1507	Handle
24	1507	Bolt.
25	1507	Tube and pad assembly.
26	1507	Wheel.
27	1507	Shaft.
28	1507	Pin
29	1507	Screw.
30	1507	Screw.
31	1507	Handle.
32	1507	Arm.
33	1507	Nut.
34	1507	Washer.
35	1507	Screw.
36	1507	Nut.

Figure D-20. Landing gear.

242-451 1652

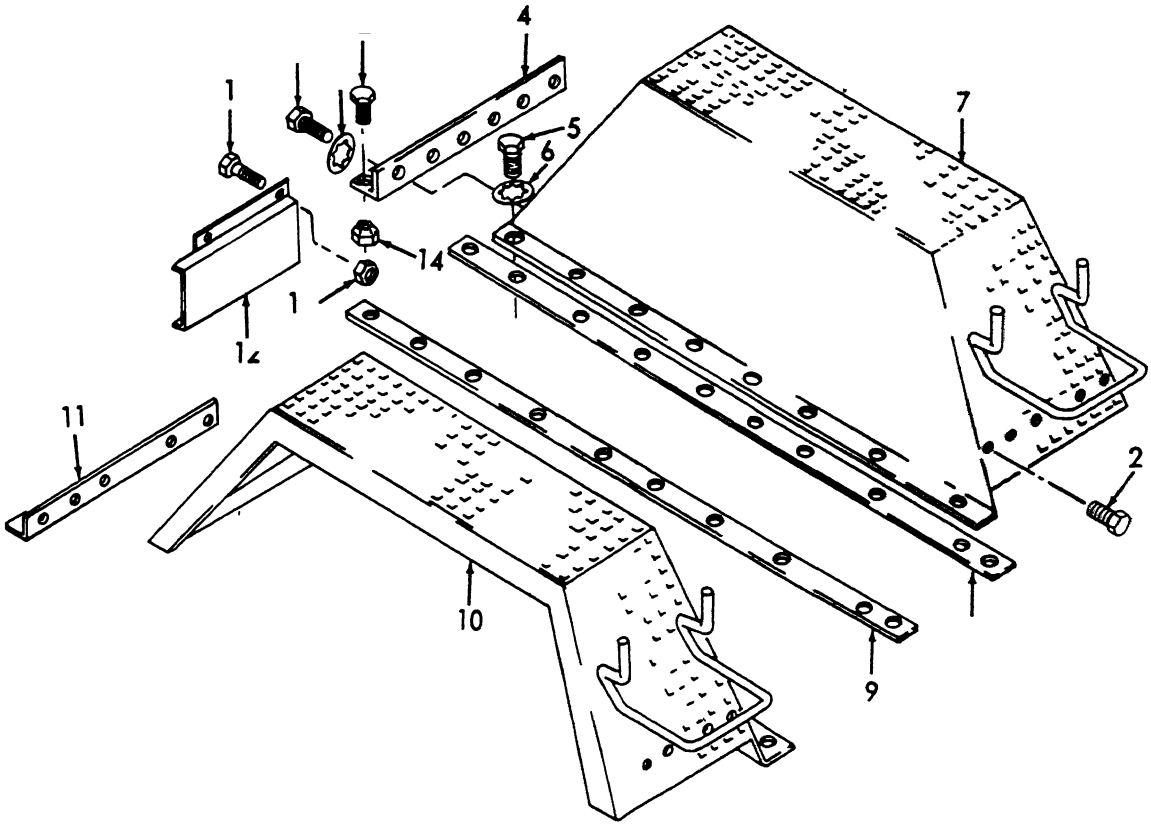

MEC 2330-216-15/49

IT M NO	FUNC-TIONAL GROUP	ITEM NAM	ITEM NO	FUNC-TIONAL GROUP	ITEM NAME	ITEM NO	FUNC-TIONAL GROUP	ITEM NAME
1--------	1801	Screw	6--------	1801	W her	11-------	1801	racket
2--------	1801	Screw	7--------	1801	Fender.	12-------	1801	Guard.
3--------	1801	Washer.	8--------	1801	Bar.	13-------	1801	Nut
4--------	1801	racket	9--------	1801	.	14-------	1801	Nut
5--------	1801	Screw	10-------	1801	Fender.			

Figure D-21 Fenders "A"

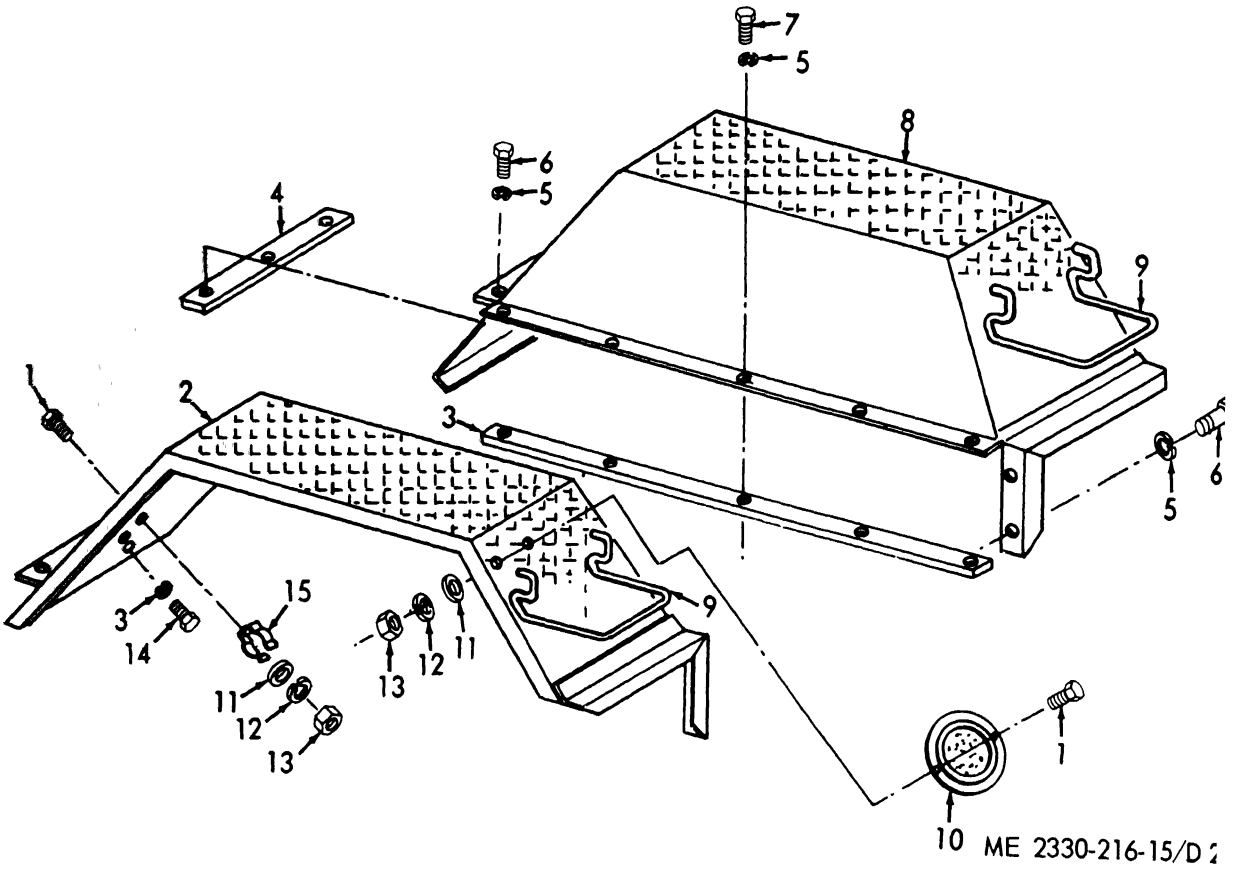

Figure No. D-22 Fenders "B"

ITEM NO.	FUNCTIONAL GROUP	ITEM NAME
1	0613	Bolt.
1	2202	Bolt.
2	1801	Fender.
3	1801	BAR.
4	1801	BAR.
5	1801	Washer.
6	1801	Screw.
7	1801	Screw.
8	1801	Fender
9	1801	Cradle.
10	2202	Reflector.
11	0613	Washer.
11	2202	Washer
12	0613	Washer.
13	0613	Nut
13	2202	Nut.
14	1801	Screw.
15	0613	Fuse clip.

Figure D-22. Fenders "B".

242-451 1652

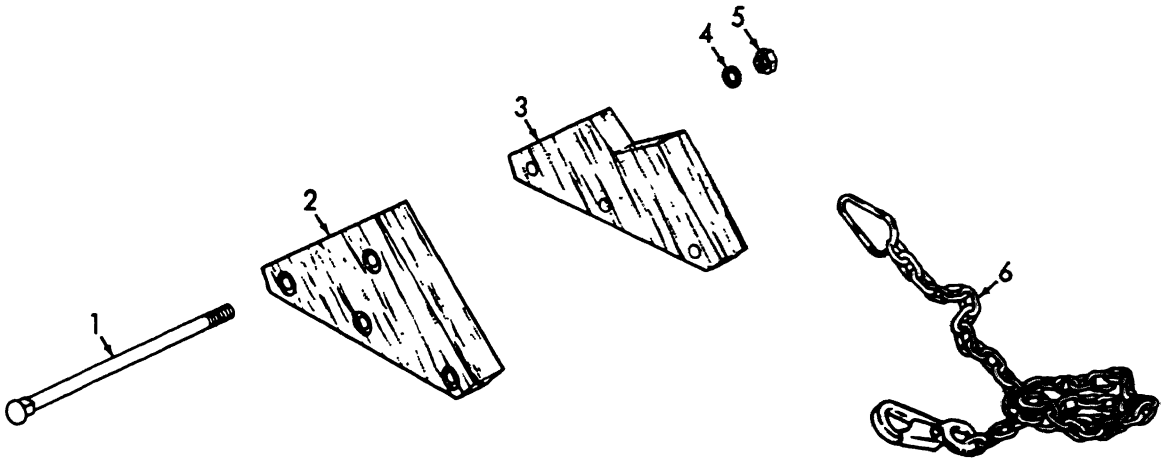

MEC 2330-216-15/50

ITEM NO	FUNCTIONAL GROUP	ITEM NAME	ITEM NO	FUNCTIONAL GROUP	ITEM NAME	ITEM NO.	FUNCTIONAL GROUP	ITEM NAME
1--------	2202	Bolt	3--------	2202	Block	5--------	2202	Nut.
2--------	2202	Block	4--------	2202	Washer.	6--------	2202	Chain.

Figure D-23 Wheel cock

242-451 1652

(1) SMR CODE / INDEX NO	(2) FEDERAL STOCK NUMBER	(3) DESCRIPTION — REFERENCE NO & MFR CODE	USABLE ON CODE	(4) UNIT OF ISSUE	(5) QTY INC IN UNIT PACK	(6) QTY INC IN UNIT	(7) 15-DAY ORGANIZATIONAL MAINTENANCE ALW (a) 1-5	(b) 6-20	(c) 21-50	(d) 51-100	(8) ILLUSTRATION (a) FIG NO	(b) ITEM NO.
00001		SECTION IV - REPAIR PARTS LIST FOR ORGANIZATIONAL MAINTENANCE										
00002		GROUP 06 - ELECTRICAL SYSTEM										
00003		0609 - LIGHTS										
0 00004	5306-274-2119	BOLT, MACHINE: CLEARANCE LIGHT MTG, HEXAGON HEAD, No. 10-32 THD SIZE, 21/32 IN. LG (88044) AN3-5A	B	EA		30						
P 0 00005	6240-106-0113	LAMP ASSEMBLY: 24v, TAILLIGHT (56190) 301212-1	B	EA		2	*	*	*	*	D3	4
P 0 00006	6240-877-3405	LAMP, INCANDESCENT: TAILLIGHT (24455) 1662	B	EA		2	*	2	2	4	D3	3
X20 00007		LENS, LAMP: TAILLIGHT (98424) 702H	B	EA		2					D3	2
X20 00008	5310-286-1930	SCREW, MACHINE: TAILLIGHT LENS MTG, No. 8-32 THD SIZE, 1/4 IN. LG	B	EA		6					D3	1
P 0 00009	6620-577-3434	LIGHT, MARKER, CLEARANCE: AMBER (96906) MS35423-1 (SAME AS LIGHT, STOCK No. 6220-726-1916 EXCEPT WHERE INDIVIDUAL COMPONENTS ARE ANNOTATED)		EA		2	*	*	*	*	D4	
P 0 00010	6220-577-3435	LIGHT, MARKER, CLEARANCE: BLACKOUT, AMBER (96906) MS35424-1 (SAME AS LIGHT, STOCK No. 6220-726-1916 EXCEPT WHERE INDIVIDUAL COMPONENTS ARE ANNOTATED)		EA		2	*	*	*	2	D4	
P 0 00011	6220-727-3288	LIGHT, MARKER, CLEARANCE: BLACKOUT, RED (96906) MS35424-2 (SAME AS LIGHT, STOCK No. 6220-726-1916 EXCEPT WHERE INDIVIDUAL COMPONENTS ARE ANNOTATED)		EA		4	*	*	*	2	D4	
P 0 00012	6220-726-1916	LIGHT, MARKER CLEARANCE: RED (96906) MS35423-2		EA		7	*	*	*	2	D4	

1 1652

(1) SMR CODE / INDEX NO	(2) FEDERAL STOCK NUMBER	(3) DESCRIPTION REFERENCE NO & MFR CODE	USABLE ON CODE	(4) UNIT OF ISSUE	(5) QTY INC IN UNIT PACK	(6) QTY INC IN UNIT	(7) 15-DAY ORGANIZATIONAL MAINTENANCE ALW (a) 1-5	(b) 6-20	(c) 21-50	(d) 51-100	(8) ILLUSTRATION (a) FIG NO	(b) ITEM NO
X20 00013	6220-752-6516	DOOR, CLEARANCE MARKER LIGHT (73331) 5939830		EA		15					D4	2
P 0 00014	5330-353-0959	FELT, MECHANICAL PREFORMED: CLEARANCE LIGHT (73331) 5939841		EA		15	*	*	*	*	D4	6
X1 00015	6250-650-0012	HARNESS, WIRING ASSEMBLY (73331) 5939837		EA		15						
P 0 00016	6240-710-2742	LAMP, INCANDESCENT: MARKER LIGHT (96906) MS15570-1251		EA		15	*	2	2	4	D4	4
P 0 00017	6220-299-7425	LENS, CLEARANCE MARKER, LIGHT: AMBER (96906) MS35421-1		EA		2	*	*	2	2	D4	3
P 0 00018	6220-729-9296	LENS, CLEARANCE MARKER LIGHT: BLACKOUT, AMBER (96906) MS35420-1 (USED ON LIGHT, STOCK NO. 6220-577-3435 ONLY)		EA		2	*	*	2	2	D4	3
P 0 00019	6220-972-7220	LENS, CLEARANCE MARKER LIGHT: BLACKOUT, RED (96906) MS35420-2 (USED ON LIGHT, STOCK NO. 6220-727-3288, ONLY)		EA		4	*	*	2	2	D4	3
P 0 00020	6220-299-7426	LENS, CLEARANCE MARKER: RED (96906) MS35421-2 (USED ON LIGHT, STOCK NO. 6220-726-1916, ONLY)		EA		7	*	*	2	2	D4	3
0 00021	5310-596-8169	NUT, SHEET SPRING: LENS MTG (73331) 5939775		EA		30					D4	10
X1 00022	6250-371-4018	PLATE MOUNTING, LAMPHOLDER (73331) 5939831		EA		15					D4	5
0 00023	5305-896-1054	SCREW, MACHINE: DOOR MTG (73331) 134424		EA		30					D4	1
X1 00024	5305-285-4540	SCREW, MACHINE: WIRING HARNESS MTG (73331) 121839		EA		15						
X1 00025	1015-833-8566	SHELL, FEMALE: WIRING HARNESS (00000) 833856		EA		15						
X1 00026	5310-013-1014	WASHER, FLAT: WIRING HARNESS MTG (73331) 131014		EA		15						

242-451 1652

(1) SMR CODE / INDEX NO	(2) FEDERAL STOCK NUMBER	(3) DESCRIPTION / REFERENCE NO & MFR CODE	USABLE ON CODE	(4) UNIT OF ISSUE	(5) QTY INC IN UNIT PACK	(6) QTY INC IN UNIT	(7) 15-DAY ORGANIZATIONAL MAINTENANCE ALW (a) 1-5	(b) 6-20	(c) 21-50	(d) 51-100	(8) ILLUSTRATION (a) FIG NO.	(b) ITEM NO
P 0 00040	6240-044-6914	LAMP, INCANDESCENT: BLACKOUT (73331) 446914 (USED ON STOPLIGHT, STOCK NO. 6220-669-5623, ONLY)	A	EA		2	*	2	2	2	D2	9
P 0 00041	6240-710-2742	LAMP, INCANDESCENT: STOP AND TURN SIGNAL (96906) MS15570-1251		EA		4	REF	REF	REF	REF	D2	4
P 0 00042	5330-297-7106	PACKING, PREFORMED: LAMP DOOR (73331) 7320658		EA		2	*	*	*	*	D2	5
X20 00043	6220-732-0642	RING, RETAINING: DOOR SCREW RETAINING (73331) 5936190		EA		12					D2	8
0 00044	5305-737-5694	SCREW, MACHINE: DOOR MTG (00000) 7320641		EA		12					D2	7
X1 00045	5306-286-1948	SCREW, MACHINE: WIRING HARNESS (73331) 121749		EA		4						
X1 00046	1015-833-8566	SHELL, FEMALE: WIRING HARNESS (00000) 8338566		EA		6						
X1 00047		SOCKET AND WIRE ASSEMBLY (73331) 8378661		EA		2						
X1 00048		WASHER, LOCK: WIRING HARNESS (73331) 121941		EA		4						
X1 00049	5310-833-8567	WASHER, SLOTTED: WIRING HARNESS (00000) 8338567		EA		6						
P 0 00050	6220-846-9745	STOPLIGHT, VEHICULAR: BLACKOUT (96906) MS51302-1	A	EA		1	*	*	*	*	D1	
X1 00051		BODY ASSEMBLY: LAMP (73331) 5945740	A	EA		1					D1	1
X20 00052	6220-755-2384	DOOR ASSEMBLY: LAMP (73331) 924984	A	EA		1					D1	4
P 0 00053	6220-678-9047	GASKET: LAMP DOOR (73331) 5942528	A	EA		1	*	*	*	*	D1	3

242-451 16652

(1) SMR CODE / INDEX NO	(2) FEDERAL STOCK NUMBER	(3) DESCRIPTION REFERENCE NO & MFR CODE	USABLE ON CODE	(4) UNIT OF ISSUE	(5) QTY INC IN UNIT PACK	(6) QTY INC IN UNIT	(7) 15-DAY ORGANIZATIONAL MAINTENANCE ALW (a) 1-5	(b) 6-20	(c) 21-50	(d) 51-100	(8) ILLUSTRATION (a) FIG NO.	(b) ITEM NO
X1 00027	5310-833-8567	WASHER, SLOTTED: WIRING HARNESS (00000) 8339567		EA		15						
X20 00028		NUT: CLEARANCE LIGHT MTG (36593) 0711172	A	EA		30					D4	7
0 00029	5310-167-1343	NUT, PLAIN, HEXAGON: CLEARANCE LIGHT MTG, No. 10-32 THD SIZE (88044) AN315-3R	B	EA		30					D4	7
0 00030	5310-584-5005	NUT, PLAIN, HEXAGON: TAILLIGHT MTG, 1/4-20 THD SIZE (96906) MS35690-405	B	EA		4					D3	5
X20 00031		SCREW, CAP, HEXAGON HEAD: BLACKOUT STOP LAMP MTG (36593) 0711163	A	EA		1					D1	7
X20 00032		SCREW, MACHINE: CLEARANCE LIGHT MTG (36593) 0711160	A	EA		30					D4	9
X20 00033		SCREW, CAP, HEXAGON HEAD: STOPLIGHT MTG (36593) 0711164	A	EA		4					D2	1
0 00034		SCREW, CAP, HEXAGON HEAD: STOPLIGHT MTG, 3/8-16 THD SIZE, 3/4 IN. LG (96906) MS35291-58	B	EA		4					D2	1
P 0 00035	6220-337-6471	STOPLIGHT, TAILLIGHT, VEHICULAR (96906) MS51330-1 (SAME AS STOPLIGHT, STOCK NO. 6220-669-5623, EXCEPT WHERE INDIVIDUAL COMPONENTS ARE ANNOTATED)	B	EA		2	*	*	2	2	D2	
P 0 00036	6220-669-5623	STOPLIGHT, TAILLIGHT, VEHICULAR (00000) 8378785	A	EA		2	*	*	*	*	D2	
X1 00037	6220-368-4945	BODY, LAMP (73331) 7525997		EA		2					D2	3
X20 00038	6220-752-6020	DOOR ASSEMBLY: COMBINATION LAMP (73331) 72526020 (USED ON STOPLIGHT, STOCK NO. 6220-669-5623, ONLY)	A	EA		2					D2	6
X20 00039	6220-752-6018	DOOR ASSEMBLY, BLACKOUT (00000) 7526018 (USED ON STOPLIGHT, STOCK NO. 6220-337-6471, ONLY)	B	EA		2					D2	6

(1) SMR CODE / INDEX NO	(2) FEDERAL STOCK NUMBER	(3) DESCRIPTION / REFERENCE NO & MFR CODE	USABLE ON CODE	(4) UNIT OF ISSUE	(5) QTY INC IN UNIT PACK	(6) QTY INC IN UNIT	(7) 15-DAY ORGANIZATIONAL MAINTENANCE ALW (a) 1-5	(b) 6-20	(c) 21-50	(d) 51-100	(8) ILLUSTRATION (a) FIG NO	(b) ITEM NO
P 0 00068	2590-038-3914	CABLE ASSEMBLY, SPECIAL PURPOSE, ELECTRICAL: CONNECTS TRAILER TO PRIME MOVER (00000) 7728811		EA		1	*	*	*	*	D18	1
0 00069	5340-764-7051	CLAMP, LOOP: WIRING HARNESS TO TRAILER TONGUE MTG, 3/8 IN. DIA, No. 10 SCREW SIZE (96906) MS21333-69	B	EA		4						
0 00070	5340-809-1490	CLAMP, LOOP: WIRING HARNESS TO REAR FRAME CROSS MEMBER MTG, 1/4 IN. DIA, 1/4 IN. SCREW SIZE (96906) MS21333-98	B	EA		2						
X20 00071		CLAMP, LOOP: WIRING HARNESS TO FRAME SIDE MEMBERS MTG, 3/8 IN. DIA, 1/4 IN. SCREW SIZE (96906) MS21333-100	B	EA		6						
X20 00072		CLIP, SPRING: PRIME MOVER CONNECTING CABLE STORAGE (36593) 0711119	A	EA		1						
P 0 00073	5340-322-9488	CLIP, SPRING: REAR CLEARANCE LIGHT WIRE MTG (00000) 8378663	A	EA		3	*	*	*	*		
X20 00074		CLIP, SPRING: TAILLIGHT WIRE MTG (00000) 7979257	A	EA		2						
X20 00075		CLIP, SPRING: WIRING HARNESS MTG (00000) H004-0327701	A	EA		18						
P 0 00076	5935-773-1428	COVER ASSEMBLY, RECEPTACLE: INTERVEHICULAR CONNECTOR (00000) 7731428		EA		1	*	*	*	*	D5	2
X20 00077		FUSE CLIP: CLEARANCE LIGHT CONNECTIONS MTG ON FENDER (00000) 8722869	B	EA		4					D22	15
X20 00078		GROMMET, RUBBER: WIRING HARNESS (36593) 0711124	A	EA		2						
P 0 00079	5325-925-9838	GROMMET, RUBBER: WIRING HARNESS MTG IN TRAILER TONGUE (70485) 559	B	EA		2	*	*	2	2		
X20 00080		HARNESS, WIRING: LEFT HAND (36593) 0731007	A	EA		1						
X20 00081		HARNESS, WIRING: RIGHT HAND (36593) 0731006	A	EA		1						

242-451 16552

(1) SMR CODE / INDEX NO	(2) FEDERAL STOCK NUMBER	(3) DESCRIPTION REFERENCE NO & MFR CODE	USABLE ON CODE	(4) UNIT OF ISSUE	(5) QTY INC IN UNIT PACK	(6) QTY INC IN UNIT	(7) 15-DAY ORGANIZATIONAL MAINTENANCE ALW (a) 1-5	(b) 6-20	(c) 21-50	(d) 51-100	(8) ILLUSTRATION (a) FIG NO.	(b) ITEM NO
X1 00054	5325-623-0928	INSULATOR, WIRING HARNESS (00000) 7064900	A	EA		2						
P O 00055	6240-710-2742	LAMP, INCANDESCENT: BLACKOUT STOP (96906) MS15570-1251	A	EA		1	REF	REF	REF	REF	D1	2
0 00056	5305-022-7139	SCREW, MACHINE: LAMP DOOR MTG (73331) 5936222	A	EA		2					D1	5
X1 00057		SCREW, SPECIAL: WIRING HARNESS MTG (73331) 835233	A	EA		2						
X1 00058	2590-797-3496	WIRING HARNESS: BLACKOUT STOP LAMP (73331) 5942524	A	EA		1						
0 00059	5310-639-8061	WASHER, LOCK: BLACKOUT STOP LAMP MTG (96906) MS35333-24	A	EA		1					D1	6
X20 00060		WASHER, LOCK: CLEARANCE LIGHT MTG (36593) 0711178	A	EA		30					D4	8
0 00061	5310-010-6497	WASHER, LOCK: CLEARANCE LIGHT MTG, No. 10 SCREW SIZE (96906) MS122055	B	EA		30					D4	8
0 00062	5310-013-8502	WASHER, LOCK: STOPLIGHT MTG (96906) MS35333-25	A	EA		4					D2	2
0 00063	5310-999-7643	WASHER, LOCK: STOPLIGHT MTG, 3/8 IN. SCREW SIZE (6906) MS122034	B	EA		4					D2	2
0 00064	5310-812-3373	WASHER, LOCK: TAILLIGHT MTG, 1/4 IN. SCREW SIZE	B	EA		4					D3	6
00065		0613 - CHASSIS WIRING HARNESS										
0 00066	5306-150-9221	BOLT, MACHINE: FUSE CLIP TO FENDER MTG, No. 10-32 THD SIZE, 15/32 IN. LG (88044) AN3-3A	B	EA		4					D22	1
0 00067	5306-151-0785	BOLT, MACHINE: WIRING HARNESS TO TRAILER TONGUE CLAMP MTG, No. 10-32 THD SIZE, 29/32 IN. LG (88044) AN3-7A	B	EA		4						

(1) SMR CODE / INDEX NO	(2) FEDERAL STOCK NUMBER	(3) DESCRIPTION REFERENCE NO & MFR CODE	USABLE ON CODE	(4) UNIT OF ISSUE	(5) QTY INC IN UNIT PACK	(6) QTY INC IN UNIT	(7) 15-DAY ORGANIZATIONAL MAINTENANCE ALW (a) 1-5	(b) 6-20	(c) 21-50	(d) 51-100	(8) ILLUSTRATION (a) FIG NO.	(b) ITEM NO.
0 00094		SCREW, CAP, HEXAGON HEAD: WIRING HARNESS TO FRAME REAR CROSS MEMBER MTG, 1/4-28 THD SIZE, 7/8 IN. LG (96906) MS35292-7	B	EA	-	2						
0 00095		SCREW, CAP, HEXAGON HEAD: WIRING HARNESS TO FRAME SIDE SIDE MEMBER CLAMP MTG, 1/4-28 THD SIZE, 1 IN. LG (96906) MS35292-8	B	EA		6						
X20 00096		SCREW, CAP, HEXAGON HEAD: RECEPTACLE MOUNTING (36593) 0711162	A	EA		4					D5	1
X20 00097		SCREW, MACHINE: WIRING HARNESS CLIP MTG (36593) 0711160	A	EA		13						
0 00098	5310-655-9800	WASHER, FLAT: FUSE CLIP TO FENDER MTG, No. 10 SCREW SIZE (88044) AN960-10L	B	EA		4					D22	11
0 00099	5310-141-1795	WASHER, FLAT: WIRING HARNESS TO FRAME REAR CROSS MEMBER MTG, 1/4 IN. SCREW SIZE (88044) AN960-416L	B	EA		2						
0 00100		WASHER, LOCK: FUSE CLIP TO FENDER MTG, No. 10 SCREW SIZE (96906) MS122055	B	EA		4					D22	12
0 00101	5310-812-3373	WASHER, LOCK: INTERVEHICULAR CONNECTOR AND COVER MTG, 1/4 IN. SCREW SIZE (96906) MS122057	B	EA		4					D5	4
0 00102	5310-812-3373	WASHER, LOCK: WIRING HARNESS TO FRAME SIDE MEMBER AND REAR CROSS MEMBER MTG, 1/4 IN. SCREW SIZE (96906) MS122057	B	EA		12						
0 00103		WASHER, LOCK: WIRING HARNESS TO TRAILER TONGUE CLAMP MTG, No. 10 SCREW SIZE (96906) MS122055	B	EA		4						
00104		GROUP 11 - REAR AXLE										
00105		1108 - STUB AXLES										
X20 00110		FITTING, LUBRICATION: AXLE BEARING (70270) A130		EA		2					D6	6

242-451 1652

(1) SMR CODE / INDEX NO	(2) FEDERAL STOCK NUMBER	(3) DESCRIPTION / REFERENCE NO & MFR CODE	USABLE ON CODE	(4) UNIT OF ISSUE	(5) QTY INC IN UNIT PACK	(6) QTY INC IN UNIT	(7) 15-DAY ORGANIZATIONAL MAINTENANCE ALW (a) 1-5	(b) 6-20	(c) 21-50	(d) 51-100	(8) ILLUSTRATION (a) FIG NO.	(b) ITEM NO.
P 0 00082	2590-105-9878	HARNESS ASSEMBLY, WIRING (56190) 600380-1	B	EA		1	*	*	*	2		
P 0 00083	5340-090-5426	BUSHING, RUBBER: INTERVEHICULAR RECEPTACLE (00000) 7722333		EA		1	*	*	2	2	D5	7
X20 00084	5935-306-2062	CONNECTOR, RECEPTACLE, ELECTRICAL: INTERVEHICULAR CONNECTING (00000) 8376208		EA		1					D5	3
X20 00085	5935-772-3309	NUT, BUSHING, RETAINING: INTERVEHICULAR RECEPTACLE (00000) 7723309		EA		1					D5	6
0 00086	5940-705-6710	TERMINAL, LUG: INTERVEHICULAR RECEPTACLE GROUNDING (00000) 7056710		EA		2						
0 00087	5310-167-1343	NUT, PLAIN, HEXAGON: FUSE CLIP TO FENDER MTG, No. 10-32 THD SIZE (88044) AN315-3R	B	EA		4					D22	13
0 00088	5310-012-0367	NUT, PLAIN, HEXAGON: INTERVEHICULAR CONNECTOR AND COVER MTG, 1/4-28 THD SIZE (96906) MS35690-425	B	EA		4					D5	5
0 00089	5310-012-0367	NUT, PLAIN, HEXAGON: WIRING HARNESS TO FRAME SIDE MEMBER AND REAR CROSS MEMBER MTG, 1/4-28 THD SIZE (96906) MS35690-425	B	EA		12						
0 00090	5310-167-1443	NUT, PLAIN, HEXAGON: WIRING HARNESS TO TRAILER TONGUE CLAMP MTG, No. 10-32 THD SIZE (88044) AN315-3R	B	EA		4						
X20 00091		NUT, SELF-LOCKING, HEXAGON: CLIP AND RECEPTACLE MTG (36593) 0711173	A	EA		14					D5	5
X20 00092		SCREW, CAP, HEXAGON HEAD: CLIP MTG (36593) 0711161	A	EA		7						
0 00093		SCREW, CAP, HEXAGON HEAD: INTERVEHICULAR CONNECTOR AND COVER MTG, 1/4-28 THD SIZE, 7/8 IN. LG (96906) MS35292-7	B	EA		4					D5	1

(1) SMR CODE / INDEX NO.	(2) FEDERAL STOCK NUMBER	(3) DESCRIPTION REFERENCE NO & MFR CODE	USABLE ON CODE	(4) UNIT OF ISSUE	(5) QTY INC IN UNIT PACK	(6) QTY INC IN UNIT	(7) 15-DAY ORGANIZATIONAL MAINTENANCE ALW (a) 1-5	(b) 6-20	(c) 21-50	(d) 51-100	(8) ILLUSTRATION (a) FIG NO.	(b) ITEM NO.
00117		GROUP 12 - BRAKES										
00118		1202 - SERVICE BRAKES										
X20 00121	2530-741-2079	BOLT, FITTING: WHEEL CYLINDER (63477) FC11409B	A	EA		2	SEE GRP 1204					
0 00122	5306-053-5011	BOLT, MACHINE: BRAKE SHOE MTG (63477) FC12089B	A	EA		1					D7	5
X20 00123	2530-693-1007	BRAKE SHOE, INTERNALLY ACTUATED (63477) FD19223	A	EA		2					D7	
X20 00127	1450-776-3264	COVER PLATE, ACCESS: CABLE HOLE COVER (00000) 8735729	A	EA		2					D7	11
P 0 00128	2530-021-6234	CYLINDER ASSEMBLY, WHEEL: LEFT HAND (63477) FD9919A (USED ON BRAKE ASSEMBLY, STOCK NO. (63477) FF42610A, ONLY)	A	EA		2	SEE GRP 1204					
P 0 00129	2530-021-6235	CYLINDER ASSEMBLY, WHEEL: RIGHT HAND (63477) FD9920A (USED ON BRAKE ASSEMBLY, STOCK NO. (63477) FF42611A, ONLY)	A	EA		2	SEE GRP 1204					
X20 00130	2530-741-1903	FITTING, DISTRIBUTOR: WHEEL CYLINDER TUBE (63477) FC13927G	A	EA		1	SEE GRP 1204					
X20 00131	2530-205-4150	FITTING, HYDRAULIC: WHEEL CYLINDER (63477) FC2579N	A	EA		2	SEE GRP 1204					
P 0 00132	5330-521-4930	GASKET: WHEEL CYLINDER INLET FITTING (63477) FC1243	A	EA		2	SEE GRP 1204					
P 0 00133	5310-820-4450	GASKET: WHEEL CYLINDER INLET FITTING (63477) FC1242C	A	EA		2	SEE GRP 1204					
X20 00134		LEVER ASSEMBLY: EMERGENCY LEFT HAND (63477) FE17748B (USED ON BRAKE ASSEMBLY, STOCK NO. (63477) FF42610A, ONLY)	A	EA		1					D7	
X20 00135		LEVER, EMERGENCY: LEFT HAND (63477) FD17750A (USED ON LEVER ASSEMBLY, STOCK NO. (63477) FE17748B, ONLY)	A	EA		1					D7	26

-451 1652

(1) SMR CODE / INDEX NO	(2) FEDERAL STOCK NUMBER	(3) DESCRIPTION REFERENCE NO & MFR CODE	USABLE ON CODE	(4) UNIT OF ISSUE	(5) QTY INC IN UNIT PACK	(6) QTY INC IN UNIT	(7) 15-DAY ORGANIZATIONAL MAINTENANCE ALW (a) 1-5	(b) 6-20	(c) 21-50	(d) 51-100	(8) ILLUSTRATION (a) FIG NO	(b) ITEM NO
X20 00136		LEVER, EMERGENCY: RIGHT HAND (63477) FD17751A (USED ON LEVER ASSEMBLY, STOCK NO. (63477) FE177498, ONLY)	A	EA		1					D7	26
X20 00137		PIN, LINK (63477) FC17758C	A	EA		1					D7	24
X20 00138	5310-722-7260	WASHER C: LINK PIN (63477) FC177578	A	EA		1					D7	23
X20 00139		WASHER, PLAIN: LIN PIN (63477) FC17756A	A	EA		1					D7	22
X20 00140	5310-952-6919	WASHER, SPRING: LINK PIN (63477) FC17755A	A	EA		1					D7	21
X20 00141		LEVER ASSEMBLY: EMERGENCY RIGHT HAND (63477) FE177498 (USED ON BRAKE ASSEMBLY, STOCK NO. (63477) FF42611A, ONLY) (SAME AS LEVER ASSEMBLY, STOCK NO. (63477) F317748B, EXCEPT WHERE INDIVIDUAL COMPONENTS ARE ANNOTATED)	A	EA		1					D7	
X20 00142	2530-774-9041	LINK ASSEMBLY: LEFT HAND (63477) FE17759A (USED ON BRAKE ASSEMBLY, STOCK NO. (63477) FF42610A, ONLY)	A	EA		1					D7	
X20 00143		LINK, EMERGENCY: LEFT HAND (63477) FD17761B (USED ON LINK ASSEMBLY, STOCK NO. 2580-774-9401, ONLY)	A	EA		1					D7	20
X20 00144		LINK, EMERGENCY: RIGHT HAND (63477) FD17762B (USED ON LINK ASSEMBLY, STOCK NO. 2530-774-9402, ONLY)	A	EA								5
X20 00145		PIN, LINK: EMERGENCY (63477) FC17758A	A									
X20 00146	5310-722-7260	WASHER C: LINK PIN (63477) FC177578	A									

242-451 1652

T 5- 0-161

(1) SMR CODE / INDEX NO.	(2) FEDERAL STOCK NUMBER	(3) DESCRIPTION REFERENCE NO & MFR CODE	USABLE ON CODE	(4) UNIT OF ISSUE	(5) QTY INC IN UNIT PACK	(6) QTY INC IN UNIT	(7) 15-DAY ORGANIZATIONAL MAINTENANCE ALW (a) 1-5	(b) 6-20	(c) 21-50	(d) 51-100	(8) ILLUSTRATION (a) FIG NO.	(b) ITEM NO.
00117		GROUP 12 - BRAKES										
00118		1202 - SERVICE BRAKES										
X20 00121	2530-741-2079	BOLT, FITTING: WHEEL CYLINDER (63477) FC11409B	A	EA		2	SEE GRP 1204					
0 00122	5306-053-5011	BOLT, MACHINE: BRAKE SHOE MTG (63477) FC12089B	A	EA		1					D7	5
X20 00123	2530-693-1007	BRAKE SHOE, INTERNALLY ACTUATED (63477) FD19223	A	EA		2					D7	
X20 00127	1450-776-3264	COVER PLATE, ACCESS: CABLE HOLE COVER (00000) 8735729	A	EA		2					D7	11
P 0 00128	2530-021-6234	CYLINDER ASSEMBLY, WHEEL: LEFT HAND (63477) FD9919A (USED ON BRAKE ASSEMBLY, STOCK NO. (63477) FF42610A, ONLY)	A	EA		2	SEE GRP 1204					
P 0 00129	2530-021-6235	CYLINDER ASSEMBLY, WHEEL: RIGHT HAND (63477) FD9920A (USED ON BRAKE ASSEMBLY, STOCK NO. (63477) FF42611A, ONLY)	A	EA		2	SEE GRP 1204					
X20 00130	2530-741-1903	FITTING, DISTRIBUTOR: WHEEL CYLINDER TUBE (63477) FC13927G	A	EA		1	SEE GRP 1204					
X20 00131	2530-205-4150	FITTING, HYDRAULIC: WHEEL CYLINDER (63477) FC2579N	A	EA		2	SEE GRP 1204					
P 0 00132	5330-521-4930	GASKET: WHEEL CYLINDER INLET FITTING (63477) FC1243	A	EA		2	SEE GRP 1204					
P 0 00133	5310-820-4450	GASKET: WHEEL CYLINDER INLET FITTING (63477) FC1242C	A	EA		2	SEE GRP 1204					
X20 00134		LEVER ASSEMBLY: EMERGENCY LEFT HAND (63477) FE17748B (USED ON BRAKE ASSEMBLY, STOCK NO. (63477) FF42610A, ONLY)	A	EA		1					D7	
X20 00135		LEVER, EMERGENCY: LEFT HAND (63477) FD17750A (USED ON LEVER ASSEMBLY, STOCK NO. (63477) FE17748B, ONLY)	A	EA		1					D7	26

-451 1652

(1) SMR CODE / INDEX NO	(2) FEDERAL STOCK NUMBER	(3) DESCRIPTION REFERENCE NO & MFR CODE	USABLE ON CODE	(4) UNIT OF ISSUE	(5) QTY INC IN UNIT PACK	(6) QTY INC IN UNIT	(7) 15-DAY ORGANIZATIONAL MAINTENANCE ALW (a) 1-5	(b) 6-20	(c) 21-50	(d) 51-100	(8) ILLUSTRATION (a) FIG NO	(b) ITEM NO
X20 00136		LEVER, EMERGENCY: RIGHT HAND (63477) FD17751A (USED ON LEVER ASSEMBLY, STOCK NO. (63477) FE17749B, ONLY)	A	EA		1					D7	26
X20 00137		PIN, LINK (63477) FC17758C	A	EA		1					D7	24
X20 00138	5310-722-7260	WASHER C: LINK PIN (63477) FC177578	A	EA		1					D7	23
X20 00139		WASHER, PLAIN: LIN PIN (63477) FC17756A	A	EA		1					D7	22
X20 00140	5310-952-6919	WASHER, SPRING: LINK PIN (63477) FC17755A	A	EA		1					D7	21
X20 00141		LEVER ASSEMBLY: EMERGENCY RIGHT HAND (63477) FE17749B (USED ON BRAKE ASSEMBLY, STOCK NO. (63477) FF42611A, ONLY) (SAME AS LEVER ASSEMBLY, STOCK NO. (63477) F317748B, EXCEPT WHERE INDIVIDUAL COMPONENTS ARE ANNOTATED)	A	EA		1					D7	
X20 00142	2530-774-9041	LINK ASSEMBLY: LEFT HAND (63477) FE17759A (USED ON BRAKE ASSEMBLY, STOCK NO. (63477) FF42610A, ONLY)	A	EA		1					D7	
X20 00143		LINK, EMERGENCY: LEFT HAND (63477) FD17761B (USED ON LINK ASSEMBLY, STOCK NO. 2580-774-9401, ONLY)	A	EA		1					D7	20
X20 00144		LINK, EMERGENCY: RIGHT HAND (63477) FD17762B (USED ON LINK ASSEMBLY, STOCK NO. 2530-774-9402, ONLY)	A	EA		1					D7	20
X20 00145		PIN, LINK: EMERGENCY (63477) FC17758A	A	EA		1					D7	24
X20 00146	5310-722-7260	WASHER C: LINK PIN (63477) FC177578	A	EA		1					D7	23

(1) SMR CODE / INDEX NO	(2) FEDERAL STOCK NUMBER	(3) DESCRIPTION — REFERENCE NO & MFR CODE	USABLE ON CODE	(4) UNIT OF ISSUE	(5) QTY INC IN UNIT PACK	(6) QTY INC IN UNIT	(7) 15-DAY ORGANIZATIONAL MAINTENANCE ALW (a) 1-5	(b) 6-20	(c) 21-50	(d) 51-100	(8) ILLUSTRATION (a) FIG NO.	(b) ITEM NO.
X20 00147		WASHER, PLAIN: LINK PIN (63477) FC17756A	A	EA		1					D7	22
X20 00148	5301-952-9616	WASHER, SPRING: LINK PIN (63477) FC17755A	A	EA		1					D7	21
X20 00149	2530-774-9402	LINK ASSEMBLY: RIGHT HAND (63477) FE17760A (USED ON BRAKE ASSEMBLY, STOCK NO. (63477) FF42611A, ONLY) (SAME AS LINK ASSEMBLY, STOCK NO. 2530-774-9401, EXCEPT WHERE INDIVIDUAL COMPONENTS ARE ANNOTATED)	A	EA		1					D7	
0 00150	5310-660-2649	NUT, PLAIN, HEXAGON: BRAKE SHOE MTG	A	EA		1					D7	19
0 00151	5310-584-5005	NUT, PLAIN, HEXAGON: CABLE HOLE COVER MTG (00000) 120375	A	EA		4					D7	9
0 00152	5310-208-6829	NUT, PLAIN, HEXAGON: LINK PIN MTG	A	EA		4					D7	15
X20 00153		PIN, ANCHOR: BRAKE SHOE (63477) FC12088D	A	EA		2					D7	45
X20 00154		PIN, LINK (63477) FC17758A	A	EA		2					D7	24
0 00156	5306-496-2234	BOLT, MACHINE: SUPPORT	A	EA		4						
X20 00157		GEAR, ADJUSTING: BRAKE SHOE (63477) FC14257	A	EA		2					D7	40
0 00158	5310-011-4493	NUT, PLAIN, HEXAGON: ADJUSTING GEAR MOUNTING (63477) FC14257	A	EA		2					D7	42
X20 00161	2530-966-5469	STUD ASSEMBLY: ADJUSTING (63477) FC15966A	A	EA		2					D7	

242-451 1652

(1) SMR CODE / INDEX NO	(2) FEDERAL STOCK NUMBER	(3) DESCRIPTION: REFERENCE NO & MFR CODE	USABLE ON CODE	(4) UNIT OF ISSUE	(5) QTY INC IN UNIT PACK	(6) QTY INC IN UNIT	(7) 15-DAY ORGANIZATIONAL MAINTENANCE ALW (a) 1-5	(b) 6-20	(c) 21-50	(d) 51-100	(8) ILLUSTRATION (a) FIG NO	(b) ITEM NO
0 00162	5305-523-7535	STUD, ADJUSTING (63477) FC15965	A	EA		1					D7	34
X20 00164	2530-475-1299	WASHER, SPRING: ADJUSTING STUD (63477) FC22218	A	EA		1					D7	33
X20 00165	1440-798-4824	SUPPORT ASSEMBLY: BRAKE SHOE (63477) FD17764A (USED ON PLATE ASSEMBLY, STOCK NO. 2530-679-5770, ONLY)	A	EA		2					D7	
X20 00166	2530-770-9149	WHEEL, STAR: BRAKE ADJUSTING (63477) FC22219	A	EA		1					D7	48
X20 00167	2530-770-9150	SCREW, ADJUSTING: LEFT HAND (63477) FC22220	A	EA		1					D7	47
X20 00168		SUPPORT, BRAKE: LEFT HAND (63477) FE14751	A	EA		1					D7	43
X20 00169		SUPPORT ASSEMBLY: BRAKE SHOE (63477) FD17765 (USED ON PLATE ASSEMBLY, STOCK NO. (63477) FE19580, ONLY)	A	EA		2					D7	
X20 00170	2530-770-9149	WHEEL, STAR: BRAKE ADJUSTING (63477) FC22219	A	EA		1					D7	48
X20 00171	2530-770-9151	SCREW, ADJUSTING: RIGHT HAND (63477) FC22221	A	EA		1					D7	47
0 00173	5310-186-7510	WASHER, LOCK: ADJUSTING GEAR MTG (78189) 1218-00	A	EA		2					D7	41
0 00174	5310-209-0764	WASHER, LOCK: SUPPORT MTG (78189) 1120-08	A	EA		4					D7	
X20 00175		WASHER, STUD: ADJUSTING GEAR (63477) FC11983	A	EA		4					D7	32
0 00177	5305-010-0002	SCREW, CAP, HEXAGON HEAD BRAKE SHOE MTG	A	EA		1					D7	27
0 00178	5305-269-2803	SCREW, CAP, HEXAGON HEAD: SUPPORT MTG (96906) MS90726-60	A	EA		8					D7	46

242-451 1652

(1) SMR CODE / INDEX NO	(2) FEDERAL STOCK NUMBER	(3) DESCRIPTION / REFERENCE NO & MFR CODE	USABLE ON CODE	(4) UNIT OF ISSUE	(5) QTY INC IN UNIT PACK	(6) QTY INC IN UNIT	(7) 15-DAY ORGANIZATIONAL MAINTENANCE ALW (a) 1-5	(b) 6-20	(c) 21-50	(d) 51-100	(8) ILLUSTRATION (a) FIG NO.	(b) ITEM NO.
X20 00179		SHIELD, WHEEL CYLINDER: LEFT HAND (63477) FD9555J (USED ON BRAKE ASSEMBLY, STOCK NO. (63477) FF42610A, ONLY)	A	EA		2	SEE GRP 1204					
X20 00180	9515-529-9824	SHIELD, WHEEL CYLINDER: RIGHT HAND (63477) FD9556J (USED ON BRAKE ASSEMBLY, STOCK NO. (63477) FF42611A, ONLY)	A	EA		2	SEE GRP 1204					
X20 00181	2530-089-6884	SLEEVE, BOLT: BRAKE SHOE MTG (63477) FC13993F	A	EA		2					D7	14
P O 00182	5340-321-6488	SPRING, RETURN: BRAKE SHOE (63477) FC17763C	A	EA		2	*	*	*	*	D7	25
X20 00183	2530-741-1908	TUBE ASSEMBLY, HYDRAULIC CYLINDER: LEFT HAND LOWER (63477) FD13350H (USED ON BRAKE ASSEMBLY, STOCK NO. (63477) FF42610A, ONLY)	A	EA		1	SEE GRP 1204					
X20 00184	2530-741-1906	TUBE ASSEMBLY, HYDRAULIC CYLINDER: LEFT HAND, UPPER (63477) FD13349F (USED ON BRAKE ASSEMBLY, STOCK NO. (63477) FF42610A, ONLY)	A	EA		1	SEE GRP 1204					
X20 00185	2530-741-1909	TUBE ASSEMBLY, HYDRAULIC CYLINDER: RIGHT HAND, LOWER (63477) FD13352G (USED ON BRAKE ASSEMBLY, STOCK NO. (63477) FF42611A, ONLY)	A	EA		1	SEE GRP 1204					
X20 00186	2530-741-1907	TUBE ASSEMBLY, HYDRAULIC CYLINDER: RIGHT HAND, UPPER (63477) FD13351E (USED ON BRAKE ASSEMBLY, STOCK NO. (63477) FF42611A, ONLY)	A	EA		1	SEE GRP 1204					
O 00187	5310-010-3319	WASHER, LOCK: BRAKE SHOE AND CABLE HOLE COVER MTG	A	EA		8					D7	10
X20 00188	5310-013-6857	WASHER, LOCK: RETURN SPRING PIN, EXTERNAL TOOTH	A	EA		4					D7	16

242-451 1652

(1) SMR CODE / INDEX NO	(2) FEDERAL STOCK NUMBER	(3) DESCRIPTION — REFERENCE NO & MFR CODE	USABLE ON CODE	(4) UNIT OF ISSUE	(5) QTY INC IN UNIT PACK	(6) QTY INC IN UNIT	(7) 15-DAY ORGANIZATIONAL MAINTENANCE ALW (a) 1-5	(b) 6 20	(c) 21-50	(d) 51-100	(8) ILLUSTRATION (a) FIG NO	(b) ITEM NO
0 00189	5310-010-3320	WASHER, LOCK: WHEEL CYLINDER MTG	A	EA		4	SEE GRP 1204					
0 00190	5310-964-0234	WASHER, PLAIN: BRAKE SHOE MTG (63477) FC6783	A	EA		4					D7	18
0 00193	5306-741-1760	BOLT, SQUARE NECK: BRAKE SHOE MTG (63477) FC12089	B	EA		2					D7	5
X20 00194	2530-774-9401	BRAKE SHOE, INTERNALLY ACTUATED: LEFT HAND WITH LINK (63477) FE17759 (USED ON BRAKE ASSEMBLY, STOCK NO. 2530-730-7620, ONLY) (SAME AS BRAKE SHOE, STOCK NO. (63477) FE17759 EXCEPT WHERE INDIVIDUAL COMPONENTS ARE ANNOTATED)	B	EA		1					D7	
X20 00195		BRAKE SHOE, INTERNALLY ACTUATED: RIGHT HAND, WITH LINK (63477) FD17760 (USED ON BRAKE ASSEMBLY, STOCK NO. 2530-730-7621, ONLY)	B	EA		1					D7	
X20 00196	2530-693-1007	BRAKE SHOE, INTERNALLY ACTUATED (63477) FD19223	B	EA		2					D7	
X20 00197		SHOE, BRAKE (63477) FE19222	B	EA		2					D7	17
X20 00198	2530-074-2358	LINK, EMERGENCY: LEFT HAND (63477) FD17761 (USED ON BRAKE SHOE, STOCK NO. 2530-774-9401, ONLY)	B	EA		1					D7	20
X20 00199		LINK, EMERGENCY: RIGHT HAND (63477) FD17762 (USED ON BRAKE SHOE, STOCK NO. (63477) FE17760, ONLY)	B	EA		1					D7	20
X20 00200	2530-322-7261	PIN, SERVICE BRAKE (63477) FC17758	B	EA		4					D7	24
0 00201	5310-903-3993	NUT, PLAIN, HEXAGON: LINK PIN MTG (96906) MS35690-731	B	EA		4					D7	15

242-451 1652

(1) SMR CODE / INDEX NO	(2) FEDERAL STOCK NUMBER	(3) DESCRIPTION REFERENCE NO & MFR CODE	USABLE ON CODE	(4) UNIT OF ISSUE	(5) QTY INC IN UNIT PACK	(6) QTY INC IN UNIT	(7) 15-DAY ORGANIZATIONAL MAINTENANCE ALW (a) 1-5	(b) 6-20	(c) 21-50	(d) 51-100	(8) ILLUSTRATION (a) FIG NO	(b) ITEM NO.
0 00229	5310-543-2641	NUT, PLAIN, HEXAGON: ADJUSTING GEAR MTG (96906) MS35691-522		EA		4					D7	42
0 00230		SCREW, CAP, HEXAGON HEAD: SUPPORT MTG, 3/8-24 THD SIZE, 9/16 IN. LG (96906) MS35304-57	B	EA		8					D7	38
X20 00231	1095-788-6038	STUD ASSEMBLY: ADJUSTING (63477) FC15966	B	EA		4					D7	
X20 00232	5305-523-7535	STUD ADJUSTING (63477) FC15965		EA		4					D7	34
X20 00233	2530-475-1299	WASHER, SPRING: ADJUSTING STUD (63477) FC22218	B	EA		4					D7	33
X20 00234	1440-798-4824	SUPPORT AND ADJUSTER: WHEEL BRAKE PLATE, LEFT HAND (63477) FD17764 (USED ON PLATE ASSEMBLY, STOCK NO. 2530-679-5770, ONLY)	B	EA		2					D7	
P 0 00235	2530-770-9150	SCREW, BRAKE SHOE ADJUSTING: LEFT HAND (63477) FC22220	B	EA		2	*	*	*	2	D7	47
X20 00236		SUPPORT, BRAKE: LEFT HAND (63477) FE14752	B	EA		2					D7	43
X20 00237	2530-770-9149	WHEEL, STAR: BRAKE ADJUSTING (63477) FC22219		EA		2					D7	48
X20 00238		SUPPORT AND ADJUSTER: WHEEL BRAKE PLATE, RIGHT HAND (63477) FD17765 (USED ON PLATE ASSEMBLY, STOCK NO. (63477) FE19580, ONLY)	B	EA		2					D7	
P 0 00239	2530-770-9151	SCREW, BRAKE SHOE ADJUSTING: RIGHT HAND (63477) FC22221	B	EA		2	*	*	*	2	D7	47
X20 00240		SUPPORT, BRAKE: RIGHT HAND (63477) FE14751	B	EA		2					D7	43
X20 00241	2530-770-9149	WHEEL, STAR: BRAKE ADJUSTING (63477) FC22219	B	EA		2					D7	48
X20 00242	5310-741-2120	WASHER, FLAT: ADJUSTING GEAR MTG (63477) FC11983		EA		4					D7	32

242-451 1652

(1) SMR CODE / INDEX NO	(2) FEDERAL STOCK NUMBER	(3) DESCRIPTION REFERENCE NO & MFR CODE	USABLE ON CODE	(4) UNIT OF ISSUE	(5) QTY INC IN UNIT PACK	(6) QTY INC IN UNIT	(7) 15-DAY ORGANIZATIONAL MAINTENANCE ALW (a) 1-5	(b) 6 20	(c) 21-50	(d) 51-100	(8) ILLUSTRATION (a) FIG NO	(b) ITEM NO
0 00243	5310-639-8061	WASHER, LOCK: ADJUSTING GEAR MTG (96906) MS35333-24	B	EA		4					D7	41
0 00244	5310-627-6128	WASHER, LOCK: SUPPORT MTG, EXTERNAL TEETH, 3/8 IN. SCREW SIZE (96906) MS35335-21	B	EA		8					D7	39
P 0 00245	5305-105-6870	SCREW, CAP, HEXAGON HEAD: BRAKE SHOE MTG (00000) 181568	B	EA		2	*	*	*	2	D7	27
X20 00246		SCREW, CAP, HEXAGON HEAD: BRAKE WHEEL CYLINDER MTG (00000) 180075	B	EA		8	SEE GRP 1204					
P 0 00247	2530-741-2050	SHIELD, BRAKE WHEEL: LEFT HAND (63477) FD9556 (USED ON BRAKE ASSEMBLY, STOCK NO. 2530-730-7620, ONLY)	B	EA		2	*	*	*	*	D7	12
P 0 00248	2530-741-2068	SHIELD, BRAKE WHEEL: RIGHT HAND (63477) FD9555 (USED ON BRAKE ASSEMBLY, STOCK NO 2530-730-7621, ONLY)	B	EA		2	*	*	*	*	D7	12
X20 00249	2530-741-2103	SPACER, SLEEVE: BRAKE SHOE MTG (63477) FC13993	B	EA		4					D7	14
X20 00250		SPRING, RETURN: BRAKE SHOE (63477) FC3471	B	EA		4					D7	
P 0 00251	2530-791-8078	TUBE ASSEMBLY, HYDRAULIC CYLINDER: LEFT HAND (63477) FD13346 (USED ON BRAKE ASSEMBLY, STOCK NO 2530-730-7620, ONLY)	B	EA		1	SEE GRP 1204					
P 0 00252	2530-791-8077	TUBE ASSEMBLY, HYDRAULIC CYLINDER: RIGHT HAND (63477) FD13347 (USED ON BRAKE ASSEMBLY, STOCK NO. 2530-730-7621, ONLY)	B	EA		1	SEE GRP 1204					
X20 00253	5310-641-9939	WASHER, FLAT: BRAKE SHOE MTG (00000) 5323088	B	EA		4					D7	18
0 00254	5310-012-0214	WASHER, LOCK: BRAKE WHEEL CYLINDER MTG (00000) 120214	B	EA		8	SEE GRP 1204					

242-451 1652

242-451 1652

(1) SMR CODE / INDEX NO	(2) FEDERAL STOCK NUMBER	(3) DESCRIPTION / REFERENCE NO & MFR CODE	N CODE	(4) UNIT OF ISSUE	(5) QTY INC IN UNIT PACK	(6) QTY INC IN UNIT	(7) 15-DAY ORGANIZATIONAL MAINTENANCE ALW (a) 1-5	(b) 6-20	(c) 21-50	(d) 51-100	(8) ILLUSTRATION (a) FIG NO.	(b) ITEM NO.
0 00255	5310-543-2705	WASHER, LOCK: CABLE HOLE COVER AND BRAKE SHOE MTG (00000) 120380	B	EA		8					D7	10
0 00259	5310-732-0559	NUT, PLAIN, HEXAGON: BRAKE BACKPLATE TO AXLE MTG, 3/8-24 THD SIZE (96906) MS51968-8		EA		24					D7	31
0 00260		SCREW, CAP, HEXAGON HEAD: BRAKE BACKPLATE TO AXLE MTG, 3/8-24 THD SIZE, 1 1/2 IN. LG (96906) MS90726-64		EA		16					D7	44
0 00261	5305-269-2803	SCREW, CAP, HEXAGON HEAD: SUPPORT MTG, 3/8-24 THD SIZE, 1 IN. LG (96906) MS90726-60		EA		8					D7	46
0 00262	5310-627-6128	WASHER, LOCK: BRAKE BACKPLATE TO AXLE MTG, 3/8 IN. SCREW SIZE (96906) MS35335-35		EA		24					D7	30
00263		1204 - HYDRAULIC BRAKE SYSTEM										
X20 00264	2530-563-8316	ADAPTER, MASTER CYLINDER OUTLET (63477) FC2832	A	EA		1					D12	23
X20 00265		ADAPTER, TUBE TO HOSE: TO WHEEL CYLINDER (45681) 4GBUS	A	EA		2					D10	11
X20 00266	2530-741-2079	BOLT, FITTING: WHEEL CYLINDER INLET (63477) FC114098	A	EA		4					D7	1
P 0 00267		BOLT, FITTING: WHEEL CYLINDER INLET (63477) 7412079	B	EA		2	*	*	*	2	D11	3
0 00268	5306-274-2119	BOLT, MACHINE: HYDRAULIC TUBE CLAMP MTG (88044) AN3-5A	B	EA		5					D11	1
0 00269	4730-202-7205	CLAMP, HOSE: MASTER CYLINDER VENT (40342) 22X16	A	EA		1					D12	17
P 0 00270	2530-107-2999	CLAMP, HOSE: MASTER CYLINDER VENT (40342) 502913	B	EA		1	*	*	*	2	D12	17

(1) SMR CODE / INDEX NO	(2) FEDERAL STOCK NUMBER	(3) DESCRIPTION REFERENCE NO & MFR CODE	USABLE ON CODE	(4) UNIT OF ISSUE	(5) QTY INC IN UNIT PACK	(6) QTY INC IN UNIT	(7) 15-DAY ORGANIZATIONAL MAINTENANCE ALW (a) 1-5	(b) 6-20	(c) 21-50	(d) 51-100	(8) ILLUSTRATION (a) FIG NO	(b) ITEM NO
X20 00271	5340-282-7519	CLAMP, LOOP: HYDRAULIC BRAKE LINE TO FRAME MTG (96906) MS21333-34	B	EA		6					D11	12
X20 00272	5340-764-7051	CLAMP, LOOP: HYDRAULIC HOSE TO FRAME MTG (96906) MS21333-69	B	EA		2					D11	27
P O 00273	5340-371-4134	CLIP, SPRING TENSION: HYDRAULIC LINE TEE MTG (63477) FC3052	B	EA		2	*	*	*	2	D11	25
X20 00274		CLIP, SPRING: HYDRAULIC TUBE MTG (36593) CR85	A	EA		5					D10	6
P O 00275	2530-106-1749	CONNECTOR ASSEMBLY: MASTER CYLINDER OUTLET (63477) 5156653		EA		1	*	*	*	*	D11	22
X20 00276		COVER, WHEEL, CYLINDER: LEFT HAND (63477) FD9555J	A	EA		2					D7	
X20 00277		COVER, WHEEL, CYLINDER: RIGHT HAND (63477) FD9556J	A	EA		2					D7	
P O R 00278	2530-204-1748	CYLINDER ASSEMBLY, MASTER (63477) FE14240 (INCLUDES COMPONENTS OF PARTS KIT STOCK NO. 2530-326-0129)		EA		1	*	*	*	*	D12	20
X1 00279		BODY, CYLINDER ASSEMBLY (53477) FC5903		EA		1					D8	1
X20 00280	4730-773-2163	CAP, FILLER (63477) FC14324		EA		1					D12	18
0 00281	5310-737-3354	WASHER, FLAT: FILLER CAP (63477) FC3587		EA		1					D12	19
P O R 00282	2530-021-6234	CYLINDER ASSEMBLY, WHEEL: LEFT HAND (63477) FD9919A (INCLUDES COMPONENTS OF PARTS KIT, STOCK NO. 2530-741-2066)	A	EA		2	*	*	*	*	D7	
X20 00283	5305-361-5112	BLEEDER VALVE, HYDRAULIC BRAKE (63477) FC11410	A	EA		1					D9	6
X1 00284		BODY, CYLINDER (63477) FD10122	A	EA		1					D9	7

242-451 1452

(1) SMR CODE / INDEX NO	(2) FEDERAL STOCK NUMBER	(3) DESCRIPTION — REFERENCE NO & MFR CODE	USABLE ON CODE	(4) UNIT OF ISSUE	(5) QTY INC IN UNIT PACK	(6) QTY INC IN UNIT	(7) 15-DAY ORGANIZATIONAL MAINTENANCE ALW (a) 1-5	(b) 6-20	(c) 21-50	(d) 51-100	(8) ILLUSTRATION (a) FIG NO.	(b) ITEM NO.
P O R 00287	2530-021-6235	CYLINDER ASSEMBLY, WHEEL: RIGHT HAND (63477) FD9920A (SAME AS CYLINDER ASSEMBLY, STOCK NO. 2530-021-6234)	A	EA		2	*	*	*	*	D7	
P O 00288	2530-771-4500	CYLINDER ASSEMBLY, WHEEL: LEFT HAND UPPER, AND RIGHT HAND LOWER (63477) FD9920 (SAME AS CYLINDER ASSEMBLY, STOCK NO. 2530-815-6984)	B	EA		2	*	*	*	2	D7	13
P O 00289	2530-815-6984	CYLINDER ASSEMBLY, WHEEL: RIGHT HAND UPPER AND LEFT HAND LOWER (63477) FD9919	B	EA		2	*	*	*	2	D7	13
P O 00290	2530-737-3260	BLEEDER VALVE, HYDRAULIC BRAKE: WHEEL CYLINDER (63477) FC11596	B	EA		4	*	*	*	2	D9	6
X1 00291		BODY, CYLINDER (63477) FD10122	B	EA		4					D9	7
X1 00292	2530-755-2943	BOOT, DUST AND MOISTURE: WHEEL CYLINDER (63477) FC12054	B	EA		8					D9	2
X20 00293	2530-273-7126	LINK, WHEEL CYLINDER (63477) FC12091	B	EA		8					D9	1
X1 00294	2530-778-0456	PISTON ASSEMBLY: WHEEL CYLINDER (63477) FC14430	B	EA		8					D9	3
X1 00295	2530-778-0455	CUP, HYDRAULIC BRAKE CYLINDER (63477) FD14451	B	EA		8					D9	4
X1 00296		EXPANDER: WHEEL CYLINDER PISTON (63477) FC14444	B	EA		8						
X1 00297		PISTON: WHEEL CYLINDER (63477) FC14437	B	EA		8						
X1 00298	1190-773-1511	SPRING, RETURN: WHEEL CYLINDER (63477) FC14543	B	EA		4					D9	5
0 00299	7430-289-0051	ELBOW, PIPE TO TUBE: TO WHEEL CYLINDER (00000) 504258	A	EA		2					D10	2
X20 00300	2530-741-1903	FITTING, DISTRIBUTOR: WHEEL CYLINDER TUBE (63477) FC13927G	A	EA		2					D7	36

242-451 1652

(1) SMR CODE / INDEX NO	(2) FEDERAL STOCK NUMBER	(3) DESCRIPTION REFERENCE NO & MFR CODE	USABLE ON CODE	(4) UNIT OF ISSUE	(5) QTY INC IN UNIT PACK	(6) QTY INC IN UNIT	(7) 15-DAY ORGANIZATIONAL MAINTENANCE ALW (a) 1-5	(b) 6-20	(c) 21-50	(d) 51-100	(8) ILLUSTRATION (a) FIG NO	(b) ITEM NO
P 0 00301	4730-309-3852	FITTING, DISTRIBUTOR: WHEEL CYLINDER TUBE (63477) FC6952	B	EA		2	*	*	*	2	D11	
X20 00302	2530-215-4150	FITTING, HYDRAULIC: WHEEL CYLINDER (63477) FC2579C	A	EA		4					D7	
P 0 00303	3895-732-1054	GASKET: WHEEL CYLINDER DISTRIBUTOR FITTING (63477) 5298653	B	EA		2	*	*	*	2	D11	
P 0 00304	5325-925-9838	GROMMET, RUBBER: MASTER CYLINDER TO TEE TUBE MTG (70485) 559	B	EA		1	REF	REF	REF	REF	D11	2
0 00305	5325-276-6040	GROMMET, RUBBER: TEE TO TEE HYDRAULIC TUBE MTG (96906) AN931-66-10		EA		1					D11	
P 0 00306	4720-911-1875	HOSE ASSEMBLY: HYDRAULIC TEE TO WHEEL (63477) 5276856	B	EA		2	*	*	*	2	D11	2
X20 00307		HOSE ASSEMBLY: TO WHEEL CYLINDER (45681) 220601-1	A	EA		2					D10	1
X20 00308	4720-767-9036	HOSE, BREATHER: MASTER CYLINDER (06271) 18X900	A	EA		1					D12	24
P 0 00309	4720-809-2750	HOSE, RUBBER: MASTER CYLINDER VENT (40342) 8365425	B	EA		1	*	*	*	2	D12	24
0 00310	4730-592-4225	INVERTED NUT, TUBE COUPLING: MASTER CYLINDER OUTLET (63477) FC2577	A	EA		1					D12	22
0 00311	4730-993-4989	NIPPLE, TUBE: HYDRAULIC TUBE (45681) 4HBUS	A	EA		1					D10	7
0 00312	5310-167-1343	NUT, PLAIN, HEXAGON: HYDRAULIC TUBE CLAMP MTG (88044) AN315-3R	B	EA		8					D11	9
X20 00313	5310-584-5539	NUT, PLAIN, HEXAGON: MASTER CYLINDER MTG (24617) 174855	A	EA		3					D12	11
0 00314	5310-515-8052	NUT, SELF-LOCKING, HEXAGON: HYDRAULIC LINE TEE TO TONGUE MTG (96906) MS20365-428	B	EA		1					D11	19
X20 00315		NUT, SELF-LOCKING, HEXAGON: HYDRAULIC TUBE CLIP MTG (36593) 0711172	A	EA		5					D10	14

242-451 1652

242-451 1652

(1) SMR CODE / INDEX NO	(2) FEDERAL STOCK NUMBER	(3) DESCRIPTION / REFERENCE NO & MFR CODE		(4) UNIT OF ISSUE	(5) QTY INC IN UNIT PACK	(6) QTY INC IN UNIT	(7) 15-DAY ORGANIZATIONAL MAINTENANCE ALW (a) 1-5	(b) 6-20	(c) 21-50	(d) 51-100	(8) ILLUSTRATION (a) FIG NO	(b) ITEM NO.
P O 00333		PLUG, MACHINE THREAD: HYDRAULIC LINES TEE, HEXAGON HEAD (63477) 8681560		EA		1	*	*	*	2	D11	16
P O 00334	4730-293-7947	PLUG, MACHINE THREAD: HYDRAULIC LINES TEE, HEXAGON HEAD (04255) 131X4		EA		1	*	*	*	2	D11	26
X20 00335		SCREW, CAP, HEXAGON HEAD: BRAKE WHEEL CYLINDER MTG (00000) 180075	B	EA		8					D7	6
O 00336	5305-012-3456	SCREW, CAP, HEXAGON HEAD: HYDRAULIC LINE TEE TO TONGUE MTG (96906) MS35292-7	B	EA		1					D11	17
O 00337	5305-267-8974	SCREW, CAP, HEXAGON HEAD: TUBE CLAMP TO FRAME SIDE MTG (96906) MS35292-8	B	EA		3					D11	14
X20 00338	5305-018-1656	SCREW, CAP, HEXAGON: WHEEL CYLINDER MTG	A	EA		8					D7	6
X20 00339		SCREW, MACHINE: HYDRAULIC TUBE CLIP MTG (36593) 0711160	A	EA		5					D10	5
P O 00340	4730-106-4407	TEE: HYDRAULIC LINES, TRAILER TONGUE (63477) 5167157	B	EA		1	*	*	*	2	D11	15
P O 00341	4730-106-5526	TEE: HYDRAULIC LINES (63477) 10893148	B	EA		2	*	*	*	2	D11	8
X20 00342		TEE, TUBE: HYDRAULIC BRAKE (45681) 4JBUS	A	EA		1					D10	3
P O 00343	2530-791-8078	TUBE ASSEMBLY, HYDRAULIC CYLINDER: LEFT HAND (63477) FD13346 (USED ON BRAKE ASSEMBLY, STOCK NO. 2530-730-7620, ONLY)	B	EA		1	*	*	*	*	D7	
P O 00344	2530-791-8077	TUBE ASSEMBLY, HYDRAULIC CYLINDER: RIGHT HAND (63477) FD13347 (USED ON BRAKE ASSEMBLY, STOCK NO. 2530-730-7621, ONLY)	B	EA		1	*	*	*	*	D7	
P O 00345	4730-359-0230	BOLT, FITTING: WHEEL CYLINDER INLET (63477) FC11409	B	EA		4	*	*	*	2	D7	1

(1) SMR CODE / INDEX NO	(2) FEDERAL STOCK NUMBER	(3) DESCRIPTION REFERENCE NO & MFR CODE	USABLE ON CODE	(4) UNIT OF ISSUE	(5) QTY INC IN UNIT PACK	(6) QTY INC IN UNIT	(7) 15-DAY ORGANIZATIONAL MAINTENANCE ALW (a) 1-5	(b) 6 20	(c) 21-50	(d) 51-100	(8) ILLUSTRATION (a) FIG NO	(b) ITEM NO
P 0 00346	1190-773-1513	FITTING, WHEEL (63477) FC2579M	B	EA		4	*	*	*	2	D7	3
P 0 00347	2530-741-1903	FITTING, DISTRIBUTOR: WHEEL CYLINDER (63477) FC13927	B	EA		2	*	*	*	2	D7	36
X20 00348	2530-741-1906	TUBE ASSEMBLY, METAL: LEFT HAND, LOWER (63477) FD13349 (USED ON TUBE ASSEMBLY, STOCK No. 2530-791-8078, ONLY)	B	EA		1					D7	37
P 0 00349	2530-566-7134	TUBE ASSEMBLY, METAL: LEFT HAND, UPPER (63477) FD13350 (USED ON TUBE ASSEMBLY, STOCK No. 2530-791-8078, ONLY)	B	EA		1	*	*	*	*	D7	35
P 0 00350		TUBE ASSEMBLY, METAL: RIGHT HAND, LOWER (63477) FD13352 (USED ON TUBE ASSEMBLY, STOCK No (63477) FD19947, ONLY)	B	EA		1	*	*	*	*	D7	35
P 0 00351	2530-741-1907	TUBE ASSEMBLY, METAL: RIGHT HAND, UPPER (63477) FD13351 (USED ON TUBE ASSEMBLY, STOCK No. (63477) FD19947, ONLY)	B	EA		1	*	*	*	*	D7	37
P 0 00352	5310-274-4544	WASHER, FLAT: WHEEL CYLINDER INLET FITTING, OUTER (63477) FC1242	B	EA		4	*	*	*	2	D7	2
P 0 00353	5310-741-2088	WASHER, REAR: WHEEL CYLINDER INLET FITTING, INNER (00000) 7412088	B	EA		4	*	*	*	2	D7	4
X20 00354	2530-741-1908	TUBE ASSEMBLY, HYDRAULIC CYLINDER: LEFT HAND, LOWER (63477) FD13350H	A	EA		1					D7	
X20 00355	2530-741-1906	TUBE ASSEMBLY, HYDRAULIC CYLINDER: LEFT HAND, UPPER (63477) FD11349F	A	EA		1					D7	35
X20 00356	2530-741-1909	TUBE ASSEMBLY, HYDRAULIC CYLINDER: RIGHT HAND, LOWER (63477) FD13352G	A	EA		1					D7	37
X20 00357	2530-741-1907	TUBE ASSEMBLY, HYDRAULIC CYLINDER· RIGHT HAND, UPPER (63477) FD13351E	A	EA		1					D7	35
X20 00358	4720-511-1692	TUBE ASSEMBLY, VENT: MASTER CYLINDER (06721) N12988	A	EA		1					D12	16

242-451 1652

(1) SMR CODE / INDEX NO	(2) FEDERAL STOCK NUMBER	(3) DESCRIPTION — REFERENCE NO & MFR CODE	USABLE ON CODE	(4) UNIT OF ISSUE	(5) QTY INC IN UNIT PACK	(6) QTY INC IN UNIT	(7) 15-DAY ORGANIZATIONAL MAINTENANCE ALW (a) 1-5	(b) 6-20	(c) 21-50	(d) 51-100	(8) ILLUSTRATION (a) FIG NO	(b) ITEM NO.
P 0 00359	2530-511-1692	TUBE ASSMEBLY, VENT: MASTER CYLINDER (40342) 8365426	B	EA		1	*	*	*	*	D12	16
X20 00360		TUBE: CROSS MEMBER (91340) A12281	A	EA		1					D10	12
X20 00361		TUBE: CROSS MEMBER TO FRONT FRAME (91340) A12280	A	EA		1					D10	4
X20 00362		TUBE: HYDRAULIC BRAKE TEE TO WHEEL CYLINDER (91340) A12282	A	EA		1					D10	10
X20 00363		TUBE: MASTER CYLINDER TO UNION (91340) A12279	A	EA		1					D10	8
MFO 00364		TUBE, HYDRAULIC: CROSS MEMBER (56190) 500754-1	B	EA		1					D11	24
MFO 00365		TUBE, HYDRAULIC: CROSS MEMBER TO TONGUE TEE (56190) 500755-1	B	EA		1					D11	11
MFO 00366		TUBE, HYDRAULIC: MASTER CYLINDER TO TEE (56190) 301242-1	B	EA		1					D11	21
X20 00367		TUBE, NYLON: HYDRAULIC TUBE COVER (36593) 0711039	A	EA		1					D10	9
0 00368	5310-167-0835	WASHER, FLAT: HYDRAULIC LINE TEE TO TONGUE MTG (88044) AN960-416L	B	EA		1					D11	18
0 00369	5310-655-9800	WASHER, FLAT: HYDRAULIC TUBE CLAMP MTG (88044) AN960-10L	B	EA		8					D11	13
0 00370	5310-167-0834	WASHER, FLAT: HYDRAULIC TUBE CLIP MTG (81352) AN960-10L	A	EA		5					D10	13
0 00371	5310-247-4196	WASHER, FLAT: MASTER CYLINDER OUTLET (63477) FC17	A	EA		1					D12	21
0 00372	5330-105-6861	WASHER, FLAT: MASTER CYLINDER OUTLET (63477) 5214539	B	EA		1					D11	23
P 0 00373	5310-359-0458	WASHER, FLAT: WHEEL CYLINDER INLET FITTING (63477) FC1243	A	EA		4	*	2	2	3	D7	4

242-451 1652

(1) SMR CODE / INDEX NO	(2) FEDERAL STOCK NUMBER	(3) DESCRIPTION — REFERENCE NO & MFR CODE	USABLE ON CODE	(4) UNIT OF ISSUE	(5) QTY INC IN UNIT PACK	(6) QTY INC IN UNIT	(7) 15-DAY ORGANIZATIONAL MAINTENANCE ALW (a) 1-5	(b) 6 20	(c) 21-50	(d) 51-100	(8) ILLUSTRATION (a) FIG NO	(b) ITEM NO
P 0 00374	5310-820-4450	WASHER, FLAT: WHEEL CYLINDER INLET FITTING (63477) FC1242C	A	EA		4	*	2	2	3	D7	2
0 00375	5310-012-0214	WASHER, LOCK: BRAKE WHEEL CYLINDER MTG (00000) 120214	B	EA		8					D7	7
0 00376		WASHER, LOCK: HYDRAULIC TUBE CLAMP MTG, 0.205 IN. ID, 0.323 IN. OD, 0.046 IN. THK (96906) MS122055	B	EA		8					D11	10
X20 00377	5310-050-2340	WASHER, LOCK: MASTER CYLINDER MTG (24617) 502340	A	EA		3					D12	10
0 00378	5310-010-3320	WASHER, LOCK: WHEEL CYLINDER MTG	A	EA		8	*	*	*	*	D7	7
0 00379	5310-741-2088	WASHER, REAR: WHEEL CYLINDER DISTRIBUTOR FITTING (63477) 7412088	B	EA		2					D11	4
00380		1208 - AIR BRAKE SYSTEM										
0 00381	4730-273-8561	ADAPTER, STRAIGHT, PIPE TO TUBE: AIR FILTER AND RELAY VALVE (00000) 504264	A	EA		6					D14	20
0 00382	4730-069-1186	ADAPTER, STRAIGHT, PIPE TO TUBE: AIR FILTER AND RELAY VALVE CONNECTING (96906) MS9179-5	B	EA		4					D15	15
P 0 00383	2530-797-9295	AIR FILTER, BRAKE LINE (00000) 7411022 (SAME AS AIR FILTER, STOCK NO. (40342) N12969 EXCEPT WHERE INDIVIDUAL COMPONENTS ARE ANNOTATED)	B	EA		2	*	*	*	*	D15	14
X20 00384	2530-797-9295	AIR FILTER, BRAKE LINE (40342) N12969	A	EA		2					D14	11
X20 00385	3655-792-3484	ADAPTER, BUSHING: AIR FILTER (40342) C129208	A	EA		2					D13	7
X20 00386	4730-580-8457	ADAPTER BUSHING: AIR FILTER (00000) 7979613	B	EA		2					D13	7

242-451 1652

(1) SMR CODE / INDEX NO	(2) FEDERAL STOCK NUMBER	(3) DESCRIPTION REFERENCE NO & MFR CODE	USABLE ON CODE	(4) UNIT OF ISSUE	(5) QTY INC IN UNIT PACK	(6) QTY INC IN UNIT	(7) 15-DAY ORGANIZATIONAL MAINTENANCE ALW (a) 1-5	(b) 6-20	(c) 21-50	(d) 51-100	(8) ILLUSTRATION (a) FIG NO	(b) ITEM NO
X1 00387	2530-860-0409	BODY, FILTER (40342) N12970A		EA		2					D13	2
P 0 00388	2530-741-1081	FILTER ELEMENT: AIR FILTER (40342) N12971		EA		2	*	2	2	4	D13	3
0 00389	4730-288-8571	PLUG, PIPE: CYLINDER AIR FILTER (40342) 7X102	A	EA		2					D13	8
X20 00390	4730-018-9566	PLUG, PIPE: CYLINDER AIR FILTER (00000) 117243	B	EA		2					D13	8
X20 00391	2530-706-9064	SPRING, HELICAL, COMPRESSION: AIR FILTER (40342) N12973		EA		2					D13	5
X20 00392	5310-026-0248	WASHER, AIR FILTER (40342) N12972		EA		2					D13	4
P 0 00393	5330-285-5123	WASHER, NONMETALLIC: AIR FILTER (40342) 4X509		EA		2	*	*	*	2	D13	6
0 00394	5306-225-9090	BOLT, MACHINE: AIR CHAMBER SUPPORT MTG (96906) MS35292-35	B	EA		1					D12	15
0 00395	5306-559-0473	BOLT, MACHINE: AIR CHAMBER TO SUPPORT MTG (96906) MS35292-34	B	EA		1					D12	1
0 00396	5306-225-9088	BOLT, MACHINE: INTERVEHICULAR HOSE HANGER BRACKET MTG (96906) MS35292-33	B	EA		4					D18	2
X20 00397	5306-797-9269	BOLT, U: AIR FILTER MTG (40342) N13021B		EA		2					D13	1
X20 00398	2530-574-8356	BRACKET: AIR CHAMBER MTG (06721) GN3550	A	EA		1					D12	9
X20 00399		BRACKET: AIR CHAMBER MTG (40342) 8357982	B	EA		1					D12	9
X20 00400		BRACKET, HANGER: BRAKE INTERVEHICULAR HOSE (63477) AC2963	B	EA		2					D18	3
X20 00401	2530-106-4377	CHAMBER, AIR BRAKE (00000) 8357981		EA		1					D12	

242-451 1652

(1) SMR CODE / INDEX NO	(2) FEDERAL STOCK NUMBER	(3) DESCRIPTION REFERENCE NO & MFR CODE	USABLE ON CODE	(4) UNIT OF ISSUE	(5) QTY INC IN UNIT PACK	(6) QTY INC IN UNIT	(7) 15-DAY ORGANIZATIONAL MAINTENANCE ALW (a) 1-5	(b) 6 20	(c) 21-50	(d) 51-100	(8) ILLUSTRATION (a) FIG NO	(b) ITEM NO
X20 00402		BODY WITH STUD (40342) N20061		EA		1					D12	8
0 00403	5306-012-0213	BOLT, MACHINE: COVER TO BODY (40342) 3X11		EA		16					D12	29
X20 00404	2530-026-0200	COLLAR, STOP (00000) 8365427		EA		1					D12	25
X20 00405		COVER, BODY (40342) N10675		EA		1					D12	2
X1 00406	5340-026-0224	CUP, SPRING RETAINING (04342) N12978		EA		1					D12	6
P 0 00407	2530-323-8535	DIAPHRAGM: CHAMBER (40342) N2340		EA		1	*	*	*	*	D12	3
0 00408	5310-265-9214	NUT, PLAIN, HEXAGON: COVER TO BODY (40342) 2X34		EA		16					D12	26
P 0 00409	5330-599-7920	PACKING, PREFORMED: STOP TO ROD (40342) N11728N		EA		1	*	*	*	*	D12	5
X20 00410	2530-026-0228	ROD, PISTON (40342) N12975		EA		1					D12	4
P 0 00411	2530-200-7116	SPRING, HELICAL, COMPRESSION: DIAPHRAGM (40342) N12977		EA		1	*	*	*	*	D12	7
0 00412	5310-010-3320	WASHER, LOCK: COVER TO BODY		EA		16					D12	27
0 00413	5340-286-2494	CLAMP, LOOP: AIR LINE MTG (96906) MS2133-36	B	EA		2					D15	25
0 00414	5340-269-2803	CLAMP, LOOP: RESERVOIR TO VALVE AIR LINE MTG (96906) MS21333-38	B	EA		1					D15	10
0 00415	5340-286-2594	CLAMP, LOOP: AIR TUBE TO FRAME (00000) 120523	A	EA		2					D14	3
X20 00416		CLAMP, RESERVOIR (06721) N13008A	A	EA		4					D14	16

242-451 1652

(1) SMR CODE / INDEX NO.	(2) FEDERAL STOCK NUMBER	(3) DESCRIPTION / REFERENCE NO & MFR CODE	USABLE ON CODE	(4) UNIT OF ISSUE	(5) QTY INC IN UNIT PACK	(6) QTY INC IN UNIT	(7) 15-DAY ORGANIZATIONAL MAINTENANCE ALW (a) 1-5	(b) 6-20	(c) 21-50	(d) 51-100	(8) ILLUSTRATION (a) FIG NO.	(b) ITEM NO.
X20 00417		CLAMP, RESERVOIR (40342) 7411080	B	EA		4					D15	3
O 00418	4820-142-2507	COCK, DRAIN: RESERVOIR DRAIN (00000) 103647	A	EA		1					D14	19
P O 00419	4820-107-2998	COCK, DRAIN: RESERVOIR DRAIN (40342) CDAX1-103647	B	EA		1	*	*	*	2	D15	7
X20 00420	2530-720-5002	CONNECTOR, AIR BRAKE (00000) 7091800	A	EA		2					D14	
X20 00421		CONNECTOR, TERMINAL (43024) N1201D	A	EA		1					D14	23
O 00422	5310-266-4157	NUT, PLAIN, HEXAGON: CONNECTOR (40342) 2X207	A	EA		1					D14	26
O 00423	5310-012-1326	WASHER, LOCK: CONNECTOR (40342) 4X408	A	EA		1					D14	25
P O 00424	2530-106-1746	CONNECTOR, AIR BRAKE (63477) 5228623	B	EA		2	*	*	*	2	D15	17
P O 00425	4730-595-0083	COUPLING, AIR BRAKE: INTERVEHICULAR HOSE (96906) MS35746-1		EA		2	*	*	*	2	D15	20
X20 00426		COUPLING, PIPE: BRAKE CONNECTOR (06721) 19Z31	A	EA		2					D14	22
P O 00427	2530-106-1747	COUPLING, PIPE: BRAKE CONNECTOR (63477) 144070	B	EA		2	*	*	*	2	D15	18
O 00428	4730-289-4914	ELBOW, TUBE: AIR LINE (00000) 504255	A	EA		4					D14	27
O 00429	4730-069-1187	ELBOW, PIPE TO TUBE: AIR LINE (96906) MS39182-3	B	EA		5					D15	12
O 00430		ELBOW, PIPE TO TUBE: RESERVOIR TO VALVE TUBE MTG (96906) MS39182-6	B	EA		2					D15	6
X20 00431		ELBOW, TUBE: RELAY VALVE TO RESERVOIR TUBE (45681) 4-3403-1	A	EA		2					D14	8

242-451 1652

(1) SMR CODE / INDEX NO	(2) FEDERAL STOCK NUMBER	(3) DESCRIPTION REFERENCE NO & MFR CODE	USABLE ON CODE	(4) UNIT OF ISSUE	(5) QTY INC IN UNIT PACK	(6) QTY INC IN UNIT	(7) 15-DAY ORGANIZATIONAL MAINTENANCE ALW (a) 1-5	(b) 6-20	(c) 21-50	(d) 51-100	(8) ILLUSTRATION (a) FIG NO	(b) ITEM NO
X20 00433		HOSE AND COUPLING ASSEMBLY: AIR BRAKE, INTERVEHICULAR (06721) N13213E	A	EA		2					D14	13
M O 00434	4720-106-1744	HOSE ASSEMBLY, AIR BRAKE: INTERVEHICULAR (56190) 600388-1 MANUFACTURE FROM:	B	EA		2					D15	19
X20 00434A		ADAPTER	B	EA		4						
P O 00434B		HOSE, RUBBER	B	EA		2						
X20 00435	5310-655-9544	NUT, PLAIN, HEXAGON: AIR CHAMBER BRACKET AND AIR CHAMBER TO MASTER CYLINDER (24617) 174855	A	EA		3					D12	11
O 00436	5310-543-5653	NUT, PLAIN, HEXAGON: AIR CHAMBER BRACKET AND AIR CHAMBER TO MASTER CYLINDER (96906) MS35690-625	B	EA		6					D12	11
O 00437	5310-012-0368	NUT, PLAIN, HEXAGON: AIR CHAMBER SUPPORT TO FRAME (96906) MS35690-525	B	EA		1					D12	13
O 00438	5310-550-0777	NUT, PLAIN, HEXAGON: AIR FILTER MTG (96906) MS35690-402		EA		4					D13	10
O 00439	5310-012-0367	NUT, PLAIN, HEXAGON: AIR LINE CLAMP MTG (96906) MS35690-425	B	EA		2					D15	23
O 00440	5310-021-8436	NUT, PLAIN, HEXAGON: AIR TUBE CLIP MTG (40342) 2X38	A	EA		2					D14	1
O 00441	5310-012-0368	NUT, PLAIN, HEXAGON: INTERVEHICULAR HOSE HANGER BRACKET MTG (96906) MS35690-525	B	EA		4					D18	5
O 00442	5310-012-0369	NUT, PLAIN, HEXAGON: RESERVOIR AND RELAY VALVE MTG (00000) 120369	A	EA		12					D14	14
O 00443	5310-543-5653	NUT, PLAIN, HEXAGON: RESERVOIR AND RELAY VALVE MTG (96906) MS35690-625	B	EA		7					D15	1
O 00444	5310-950-0039	NUT, SELF-LOCKING, HEXAGON: RESERVOIR MTG (96906) MS20365-624	B	EA		2					D15	27

242-451 1652

(1) SMR CODE / INDEX NO	(2) FEDERAL STOCK NUMBER	(3) DESCRIPTION REFERENCE NO & MFR CODE	USABLE ON CODE	(4) UNIT OF ISSUE	(5) QTY INC IN UNIT PACK	(6) QTY INC IN UNIT	(7) 15-DAY ORGANIZATIONAL MAINTENANCE ALW (a) 1-5	(b) 6-20	(c) 21-50	(d) 51-100	(8) ILLUSTRATION (a) FIG NO	(b) ITEM NO
X20 00445	2530-741-1078	RESERVOIR, AIR (00000) 7411078	A	EA		1					D14	17
X20 00446	2530-741-1078	RESERVOIR, AIR (00000) 7411078	B	EA		1					D15	5
O 00447	5305-637-4046	SCREW, CAP, HEXAGON HEAD: AIR CHAMBER BRACKET MTG (96906) MS35292-60	B	EA		6					D12	28
O 00448	5305-018-1364	SCREW, CAP, HEXAGON HEAD: AIR CHAMBER BRACKET MTG (40342) 3X13	A	EA		3					D12	
O 00449	5305-012-3456	SCREW, CAP, HEXAGON HEAD: AIR LINE CLAMP MTG (96906) MS35292-7	B	EA		2					D15	26
X20 00450		SCREW, CAP, HEXAGON HEAD: RESERVOIR MTG (06721) 3X1228	A	EA		2					D14	18
O 00451	5305-269-2819	SCREW, CAP, HEXAGON HEAD: RESERVOIR MTG (96906) MS35292-75	B	EA		2					D15	4
X20 00452		SCREW, CAP, HEXAGON HEAD: RESERVOIR, RELAY VALVE MTG (06721) 3X1107	A	EA		10					D14	6
O 00453	5305-269-2805	SCREW, CAP, HEXAGON HEAD: RESERVOIR, RELAY VALVE MTG (96906) MS35292-62	B	EA		7					D15	8
O 00454	5305-011-3957	SCREW, MACHINE: AIR TUBE CLIP MTG (40342) 3X401	A	EA		2					D14	4
X20 00455		SUPPORT: AIR CHAMBER (56190) 301216-1	B	EA		1					D12	12
MFO 00456		TUBE, AIR: RELAY VALVE TO RESERVOIR (36593) D323	A	EA		1					D14	7
MFO 00457		TUBE, AIR: RESERVOIR TO RELAY VALVE (56190) 301238-1	B	EA		1					D15	9
MFO 00458		TUBE, AIR: AIR FILTER TO RELAY VALVE, EMERGENCY SIDE (56190) 301240-1	B	EA		1					D15	13
MFO 00459		TUBE, AIR: RELAY VALVE TO AIR BRAKE CHAMBER (56190) 301239-1	B	EA		1					D15	16

242-451 1652

(1) SMR CODE / INDEX NO	(2) FEDERAL STOCK NUMBER	(3) DESCRIPTION — REFERENCE NO & MFR CODE	USABLE ON CODE	(4) UNIT OF ISSUE	(5) QTY INC IN UNIT PACK	(6) QTY INC IN UNIT	(7) 15-DAY ORGANIZATIONAL MAINTENANCE ALW (a) 1-5	(b) 6 20	(c) 21-50	(d) 51-100	(8) ILLUSTRATION (a) FIG NO	(b) ITEM NO
MFO 00460		TUBE, AIR: AIR FILTER TO COUPLING (56190) 301241-1	B	EA		2					D15	21
MFO 00461		TUBE, AIR: AIR FILTER TO RELAY VALVE, SERVICE SIDE (56190) 500573-1	B	EA		1					D15	22
MFO 00462		TUBE ASSEMBLY, EMERGENCY LINE: FILTER TO RELAY VALVE	A	EA		1					D14	10
MFO 00463		TUBE ASSEMBLY: RELAY VALVE TO AIR CHAMBER	A	EA		1					D14	21
MFO 00464		TUBE ASSEMBLY, SERVICE LINE: FILTER TO RELAY VALVE	A	EA		1					D14	5
MFO 00465		TUBE, COPPER: FILTER TO HOSE	A	EA		2					D14	12
P O 00466	4930-066-2508	VALVE, RELAY, EMERGENCY (40342) N3714Z	A	EA		1	*	*	*	*	D14	9
P O 00467	2530-864-0150	VALVE, RELAY, EMERGENCY (96906 MS53004-1)	B	EA		1	*	*	*	*	D15	11
O 00468		WASHER, FLAT: RESERVOIR MTG (96906) AN960-616	B	EA		4					D15	28
X20 00469	5310-050-2340	WASHER LOCK: AIR CHAMBER BRACKET AND AIR CHAMBER TO MASTER CYLINDER MTG (24617) 502340	A	EA		6					D12	10
O 00470	5310-999-7643	WASHER, LOCK: AIR CHAMBER BRACKET AND AIR CHAMBER TO MASTER CYLINDER MTG (96906) MS122034	B	EA		6					D12	10
O 00471	5310-818-3044	WASHER, LOCK: AIR CHAMBER SUPPORT TO FRAME MTG (96906) MS122058	B	EA		1					D12	14
O 00472	5310-812-3373	WASHER, LOCK: AIR FILTER MTG (96906) MS122057		EA		4					D13	9
O 00473	5310-812-3373	WASHER, LOCK: AIR LINE CLAMP MTG (96906) MS122057	B	EA		2					D15	24
X20 00474	5310-012-0380	WASHER, LOCK: AIR TUBE CLIP MTG (06721) 4X11	A	EA		2					D14	2

242-451 1652

T 5-0-16-1

17

(1) SMR CODE / INDEX NO.	(2) FEDERAL STOCK NUMBER	(3) DESCRIPTION / REFERENCE NO & MFR CODE	USABLE ON CODE	(4) UNIT OF ISSUE	(5) QTY INC IN UNIT PACK	(6) QTY INC IN UNIT	(7) 15-DAY ORGANIZATIONAL MAINTENANCE ALW (a) 1-5	(b) 6-20	(c) 21-50	(d) 51-100	(8) ILLUSTRATION (a) FIG NO.	(b) ITEM NO.
0 00475	5310-818-3044	WASHER, LOCK: INTERVEHICULAR HOSE HANGER BRACKET MTG (96906) MS122058	B	EA		4					D18	4
X20 00476	5310-261-7340	WASHER, LOCK: RESERVOIR AND RELAY	A	EA		12					D14	15
0 00477	5310-999-7643	WASHER, LOCK: RESERVOIR AND RELAY (96906) MS122034	B	EA		7					D15	2
00478		GROUP 13 - WHEELS										
00479		1311 - WHEEL ASSEMBLY										
P 0 00482	2530-741-3231	BACK, FRONT BRAKE DRUM (09386) 70632D	B	EA		2	*	*	*	*	D16	1
P 0 00483	3110-100-5951	BEARING, ROLLER, TAPERED: INCLUDES CUP (96906) MS19081-112	B	EA		4	*	*	2	2	D16	3 -4
P 0 00484	5306-335-4768	BOLT, RIBBED NECK: DRUM MTG (09386) 70627E	B	EA		36	*	*	2	2	D16	20
P 0 00485	5306-206-1560	BOLT, RIBBED SHOULDER: DRUM BACK MTG (09386) 70447E	B	EA		12	*	*	2	2	D16	2
P 0 00488	1015-614-4454	CAP, HUB (00000) 6144454	B	EA		2	*	*	*	*	D16	17
P 0 00489	2530-741-1425	DRUM, BRAKE (00000) 7411425	B	EA		2	*	*	*	*	D16	8
P 0 00490	2530-614-4356	GASKET: HUB CAP (00000) 6144356	B	EA		2	*	*	*	2	D16	16
P 0 00491	1440-677-0202	HUB, WHEEL (00000) 8719915	B	EA		2	*	*	*	*	D16	12
0 00492	5310-732-0559	NUT, PLAIN, HEXAGON: BRAKE BACKPLATE TO AXLE MTG (96906) MS51968-8	B	EA		24	SEE GRP 1202					

242-451 1652

(1) SMR CODE / INDEX NO	(2) FEDERAL STOCK NUMBER	(3) DESCRIPTION / REFERENCE NO & MFR CODE	USABLE ON CODE	(4) UNIT OF ISSUE	(5) QTY INC IN UNIT PACK	(6) QTY INC IN UNIT	(7) 15-DAY ORGANIZATIONAL MAINTENANCE ALW (a) 1-5	(b) 6 20	(c) 21-50	(d) 51-100	(8) ILLUSTRATION (a) FIG NO	(b) ITEM NO
P 0 00493	5310-741-1379	NUT, PLAIN, HEXAGON: WHEEL BEARING ADJUSTING (24617) 2275727	B	EA		4	*	*	*	2	D16	14
P 0 00494	5310-982-4908	NUT, SELF-LOCKING, HEXAGON: DRUM MTG (09386) 67428E2	B	EA		36	*	*	2	2	D16	10
0 00495	5310-594-8038	NUT, SINGLE BALL SEAT: WHEEL MTG, LEFT HAND (00000) 537801 (USED ON BRAKE ASSEMBLY, STOCK NO. (56190) 500744-1, ONLY)	B	EA		6					D16	13
P 0 00496	5310-841-5411	NUT, SINGLE BALL SEAT: WHEEL MTG, RIGHT HAND (00000) 537802 (USED ON BRAKE ASSEMBLY, STOCK NO. (56190) 500744-2, ONLY)	B	EA		6	*	*	*	2	D16	13
0 00497	5310-813-0408	NUT, SLOTTED, HEXAGON: DRUM BACK MTG (96906) MS35692-1225	B	EA		12					D16	7
0 00498		SCREW, CAP, HEXAGON HEAD: BRAKE BACKPLATE TO AXLE MTG (96906) MS90726-64	B	EA		16	SEE GRP 1202					
0 00499	5305-269-2803	SCREW, CAP, HEXAGON HEAD: SUPPORT MTG (96906) MS90726-60	B	EA		8	SEE GRP 1202					
0 00500		SCREW, MACHINE: HUB CAP MTG (96906) MS35227-79	B	EA		6					D16	19
P 0 00501	5330-741-1429	SEAL, PLAIN, ENCASED: WHEEL ASSEMBLY (24617) 2275398	B	EA		2	*	*	2	2	D16	5
0 00503		STUD, WHEEL, LEFT HAND (96906) S51946-1	B	EA		6					D16	11
0 00504		STUD, WHEEL, RIGHT HAND (96906) MS51946-2 (USED ON BRAKE ASSEMBLY, STOCK NO. (56190) 500744-2 ONLY)	B	EA		6					D16	11
0 00505	5310-582-5977	WASHER, FLAT: DRUM MTG (96906) MS27133-14	B	EA		36					D16	9
P 0 00506	5310-741-1378	WASHER, KEY: BEARING ADJUSTING (00000) 7411378	B	EA		2	*	*	*	*	D16	15

242-451 1652

SMR CODE / INDEX NO	FEDERAL STOCK NUMBER	DESCRIPTION: REFERENCE NO & MFR CODE	USABLE ON CODE	UNIT OF ISSU	QTY INC IN UNIT PACK	QTY INC IN UNIT	15-DAY ORGANIZATIONAL MAINTENANCE ALW (a) 1-5	(b) 6-20	(c) 21-50	(d) 51-100	ILLUSTRATION (a) FIG NO	(b) ITEM NO
P 0 00518	3110-143-7538	CONE, BEARING: WHEEL (36593) 071116	A	EA		2	*	*	*	*	D16	4
P 0 00519	3110-143-7586	CUP, TAPERED ROLLER BEARING: WHEEL (00000) 712869	A	EA		2	*	*	*	*	D16	3
X20 00520		DRUM, BRAKE (00000) 8719913 (USED ON HUB AND DRUM ASSEMBLY, STOCK NO. (09386) 82556, ONLY)	A	EA		1					D16	8
X20 00521	2530-741-1425	DRUM, BRAKE (00000) 7411425 (USED ON HUB AND DRUM ASSEMBLY, STOCK NO. (09386) 82556, ONLY)	A	EA		1					D16	8
X20 00522	4130-286-9977	HUB, WHEEL (09386) 82236	A	EA		1					D16	12
X20 00523	5310-982-4908	NUT, JAM: DRUM BACK MTG (00000) A172086	A	EA		6					D16	7
0 00524	5310-655-9599	NUT, LOCK: DRUM MTG (00000) 8720024	A	EA		18					D16	10
0 00525	5310-741-1379	NUT, PLAIN, HEXAGON: WHEEL BEARING (00000) 7411379	A	EA		2					D16	14
P 0 00526	5330-741-1429	SEAL, PLAIN, ENCASED: WHEEL ASSEMBLY (00000) 7411429	A	EA		2	*	*	2	2	D16	5
P 0 00527	5307-383-5959	STUD, WHEEL, RIGHT HAND (00000) 7339238 (USED ON HUB AND DRUM ASSEMBLY, STOCK NO. (09386) 82555, ONLY)	A	EA		6	*	*	*	*	D16	11
0 00528	5310-582-5977	WASHER, FLAT: DRUM MTG (00000) 120394	A	EA		18					D16	9
0 00529	5310-017-1378	WASHER, KEY: BEARING ADJUSTING (00000) 7411378	A	EA		1					D16	15
P 0 00530	5310-273-7771	NUT, SINGLE BALL SEAT, HEXAGON: WHEEL MTG, LEFT HAND (09386) 37889	A	EA		6	*	*	*	*	D16	13

242-451 1652

(1) SMR CODE / INDEX NO	(2) FEDERAL STOCK NUMBER	(3) DESCRIPTION REFERENCE NO & MFR CODE	USABLE ON CODE	(4) UNIT OF ISSUE	(5) QTY INC IN UNIT PACK	(6) QTY INC IN UNIT	(7) 15-DAY ORGANIZATIONAL MAINTENANCE ALW (a) 1-5	(b) 6-20	(c) 21-50	(d) 51-100	(8) ILLUSTRATION (a) FIG NO	(b) ITEM NO
0 00507	5310-627-6128	WASHER, LOCK: BRAKE BACKPLATE TO AXLE MTG (96906) MS35335-35	B	EA		24	SEE GRP 1202					
0 00508	5310-274-8714	WASHER, LOCK: HUB CAP MTG (96906) MS35337-63	B	EA		6					D16	18
X20 00509	1015-614-4454	CAP, HUB (00000) 6144454	A	EA		2					D16	17
M 0 00510	2530-614-4356	GASKET: HUB CAP (09386) 70271E MANUFACTURE FROM:	A	EA		2					D16	16
P 0 00510A	5330-233-5846	PAPER, GASKET (6 IN. x 6 IN. REQUIRED FOR EACH)		EA			SEE GRP 9501					
X20 00511		HUB AND DRUM ASSEMBLY (09386) 82556 (SAME AS HUB AND DRUM ASSEMBLY, STOCK NO. (09386) 82555 EXCEPT WHERE INDIVIDUAL COMPONENTS ARE ANNOTATED)	A	EA		1					D16	
X20 00512		HUB AND DRUM ASSEMBLY: RIGHT HAND (09386) 82555	A	EA		1					D16	
X20 00513	2530-741-3231	BACK, FRONT BRAKE DRUM (00000) 7413231 (USED ON HUB AND DRUM ASSEMBLY, STOCK NO. (09386) 82555, ONLY)	A	EA		1					D16	1
X20 00514	2530-322-7257	BACK, FRONT BRAKE DRUM (00000) 8719914 (USED ON HUB AND DRUM ASSEMBLY, STOCK NO. (09386) 82556, ONLY)	A	EA		1					D16	1
X20 00515	5306-206-1560	BOLT, RIBBED SHOULDER: DRUM BACK MTG (09386) 70447E	A	EA		6					D16	2
X20 00516		BOLT, RIBBED, SHOULDER: DRUM MTG (00000) 8720025	A	EA		6					D16	20
P 0 00517	5306-733-9239	BOLT, RIBBED, SHOULDER: WHEEL LEFT HAND (00000) 7339239 (USED ON HUB AND DRUM ASSEMBLY, STOCK NO. (09386) 82556, ONLY)	A	EA		6	*	*	*	*	D16	11

242 451 1652

(1) SMR CODE / INDEX NO	(2) FEDERAL STOCK NUMBER	(3) DESCRIPTION: REFERENCE NO & MFR CODE	USABLE ON CODE	(4) UNIT OF ISSUE	(5) QTY INC IN UNIT PACK	(6) QTY INC IN UNIT	(7) 15-DAY ORGANIZATIONAL MAINTENANCE ALW (a) 1-5	(b) 6-20	(c) 21-50	(d) 51-100	(8) ILLUSTRATION (a) FIG NO	(b) ITEM NO
P O 00531	5310-273-7770	NUT, SINGLE BALL SEAT, HEXAGON: WHEEL MTG, RIGHT HAND (09386) 37888	A	EA		6	*	*	*	*	D16	13
O 00532	5305-012-4060	SCREW, MACHINE: HUB CAP (09386) 0922E4	A	EA		3					D16	19
O 00533	5310-011-5109	WASHER, LOCK: HUB CAP (71300) 70036E6	A	EA		3					D16	18
X20 00534	2530-026-0265	WHEEL, PNEUMATIC TIRE (00000) 7389621	A	EA		2						
X20 00535	2530-111-9994	WHEEL, PNEUMATIC TIRE (96906) MS53044-5	B	EA		2						
00536		1313 - TIRES, TUBES										
O 00537	2640-505-6176	CAP, TIRE VALVE (53477) L300		EA		2						
P O 00538	2610-269-7383	INNER TUBE, PNEUMATIC TIRE: 900-20 (96906) MS35393-13		EA		2	*	*	*	2		
P O 00539	2610-262-8677	TIRE, PNEUMATIC: 900-20 8 PLY (96906) MS35388-16		EA		2	*	*	*	2		
O 00540	2504-055-1229	VALVE, CORE (53477) 6100E		EA		2						
00541		GROUP 15 - FRAME, TOWING ATTACHMENTS										
00542		1501 - FRAME ASSEMBLY										
X20 00543		BRACKET, GREASE GUN: INTERVEHICULAR CABLE MTG, WELDED TO TRAILER TONGUE (56190) GGB	B	EA		1					D18	9
X20 00546		RETAINER: INTERVEHICULAR CABLE MTG, WELDED TO TRAILER TONGUE (56190) 102218	B	EA		1					D18	8

242-451 1652

(1) SMR CODE / INDEX NO	(2) FEDERAL STOCK NUMBER	(3) DESCRIPTION — REFERENCE NO & MFR CODE	USABLE ON CODE	(4) UNIT OF ISSUE	(5) QTY INC IN UNIT PACK	(6) QTY INC IN UNIT	(7) 15-DAY ORGANIZATIONAL MAINTENANCE ALW (a) 1-5	(b) 6-20	(c) 21-50	(d) 51-100	(8) ILLUSTRATION (a) FIG NO	(b) ITEM NO
P 0 00547		RING ASSEMBLY, TIE DOWN (05861) 4887796	B	EA		4	*	*	*	2	D18	7
00548		1503 - TOWING ATTACHMENTS										
X20 00549		LUNETTE, TOWING (36593) 0711007	A	EA		1					D19	4
P 0 00550	2640-995-3145	LUNETTE, TOWING (96906) MS51339-1	B	EA		1	*	*	*	*	D19	4
X20 00551		NUT, PLAIN, HEXAGON: LUNETTE 1 1/8-16 THD SIZE (00000) 7411028	A	EA		1					D19	2
X20 00552	5310-696-5092	NUT, SLOTTED, HEXAGON: LUNETTE, 1 1/2-12 THD SIZE (96906) MS35692-2422	B	EA		1					D19	2
0 00553	5315-187-1824	PIN, COTTER: LUNETTE	B	EA		1					D19	1
X20 00554	5315-843-0138	PIN, COTTER: LUNETTE, 7/32 IN. DIA, 2 1/4 IN. LG (96906) MS24665-566	B	EA		1					D19	1
X20 00555		WASHER, FLAT: LUNETTE (96906) MS1595-228	A	EA		1					D19	3
P 0 00556	5310-143-6169	WASHER, FLAT: LUNETTE MTG, 1 5/8 IN. ID, 2 11/16 IN. OD, 1/4 IN. THK (56190) 102214	B	EA		1	*	*	*	*	D19	3
00557		1507 - LEVELING JACK										
X20 00558		NUT, PLAIN, HEXAGON: SUPPORT ASSEMBLY MTG, JAM, 3/4-16 THD SIZE (96906) MS35691-1225	B	EA		1					D20	18
X20 00559		NUT, SELF-LOCKING, HEXAGON: SUPPORT ASSEMBLY MTG, THIN, 3/4-16 THD SIZE (96906) MS20364-1216	B	EA		1					D20	18

TC 1-4-2-1 1052

(1) SMR CODE / INDEX NO	(2) FEDERAL STOCK NUMBER	(3) DESCRIPTION / REFERENCE NO & MFR CODE	USABLE ON CODE	(4) UNIT OF ISSUE	(5) QTY INC IN UNIT PACK	(6) QTY INC IN UNIT	(7) 15-DAY ORGANIZATIONAL MAINTENANCE ALW (a) 1-5	(b) 6-20	(c) 21-50	(d) 51-100	(8) ILLUSTRATION (a) FIG NO	(b) ITEM NO
X20 00560		SUPPORT ASSEMBLY, RETRACTABLE: TRAILER (52793) E10668	A	EA		1					D20	
X20 00561		ARM, ASSEMBLY: CRANK (52793) B10747	A	EA		1					D20	32
X20 00562		AXLE, LEVELING JACK (52793) A10744	A	EA		1					D20	27
X20 00563		BEARING, ROLLER: GEAR SCREW (52793) 0-2475	A	EA		1					D20	10
0 00564	5306-010-0121	BOLT, MACHINE: CRANK ARM	A	EA		1					D20	1
X20 00565	5306-010-0121	BOLT, MACHINE: LEG TO TUBE	A	EA		4					D20	24
0 00566	5306-174-4246	BOLT, PIVOT: TO SWIVEL SPINDLE (00000) 7979972	A	EA		1					D20	19
X20 00567	2530-693-0736	BRACKET, SWIVEL, WITH SPINDLE (00000) 8331539	A	EA		1					D20	15
X20 00568		CAP, HEAD (52793) B7545-6	A	EA		1					D20	9
X20 00569	4730-050-4308	FITTING, LUBRICATION: LANDING GEAR (52793) 16108	A	EA		2					D20	8
X20 00570		FRAME ASSEMBLY: LEG, SUPPORT ASSEMBLY (52793) C10729	A	EA		1					D20	22
X20 00571		GEAR, BEVEL: GEAR SCREW (52793) A8930	A	EA		1					D20	12
X20 00572		GEAR, BEVEL: HANDLE (52793) A9831-1A	A	EA		1					D20	7
X20 00573		HANDLE, ASSEMBLY: CRANK ARM (52793) A10421	A	EA		1					D20	31
X20 00574	2590-670-1997	HANDLE: SUPPORT ASSEMBLY (00000) 7979974	A	EA		1					D20	23

242-451 1652

(1) SMR CODE / INDEX NO	(2) FEDERAL STOCK NUMBER	(3) DESCRIPTION REFERENCE NO & MFR CODE	USABLE ON CODE	(4) UNIT OF ISSUE	(5) QTY INC IN UNIT PACK	(6) QTY INC IN UNIT	(7) 15-DAY ORGANIZATIONAL MAINTENANCE ALW (a) 1-5	(b) 6-20	(c) 21-50	(d) 51-100	(8) ILLUSTRATION (a) FIG NO	(b) ITEM NO
X20 00575	5310-011-4494	NUT, PLAIN, HEXAGON: HANDLE TO ARM	A	EA		1					D20	33
X20 00576		NUT, PLAIN, HEXAGON: SPINDLE MTG (00000) 272686	A	EA		1					D20	18
X20 00577	5310-050-3334	NUT, SELF-LOCKING, HEXAGON: LEG TO TUBE, 5/16-18 THD SIZE	A	EA		4					D20	36
0 00578	5310-045-1023	NUT, SELF-LOCKING, HEXAGON: PIVOT BOLT (00000) 451023	A	EA		1					D20	14
0 00579	5315-014-2533	PIN, GROOVED: BEVEL GEAR	A	EA		1					D20	11
0 00580	5315-044-3039	PIN, GROOVED: JACK SCREW	A	EA		1					D20	28
0 00581	5315-536-3865	PIN, STRAIGHT, HEADLESS: HANDLE SPRING WHEEL AND CRANK HANDLE	A	EA		5					D20	4
0 00582	5305-012-1887	SCREW, CAP, HEXAGON HEAD: CAP LOCK	A	EA		1					D20	35
0 00583	5305-013-8258	SCREW, CAP, HEXAGON HEAD: CRANK HANDLE TO ARM	A	EA		1					D20	30
X20 00584		SCREWSHAFT, LEVELING (52793) B9839-7	A	EA		1					D20	29
0 00585	5340-331-2340	SPACER, RING: BEVEL GEAR (00000) 8020716	A	EA		1					D20	6
X20 00586		SPACER, SCREW: BEVEL GEAR (52793) A9829	A	EA		1					D20	13
X20 00587	2530-699-8489	SPRING, HELICAL, COMPRESSION: LANDING GEAR HANDLE (00000) 8331541	A	EA		2					D20	21
X20 00588		TUBE ASSEMBLY, INNER (52793) D10733	A	EA		1					D20	25
X20 00589		TUBE ASSEMBLY, OUTER (52793) D10732	A	EA		1					D20	5

242-451 1652

(1) SMR CODE / INDEX NO	(2) FEDERAL STOCK NUMBER	(3) DESCRIPTION REFERENCE NO & MFR CODE	USABLE ON CODE	(4) UNIT OF ISSUE	(5) QTY INC IN UNIT PACK	(6) QTY INC IN UNIT	(7) 15-DAY ORGANIZATIONAL MAINTENANCE ALW (a) 1-5	(b) 6-20	(c) 21-50	(d) 51-100	(8) ILLUSTRATION (a) FIG NO.	(b) ITEM NO.
0 00590	5310-773-1354	WASHER, FLAT: HANDLE ARM	A	EA		1					D20	3
0 00591	5310-693-0738	WASHER, HANDLE (00000) 8331542	A	EA		2					D20	20
0 00592	5310-012-0214	WASHER, LOCK: ARM MTG	A	EA		1					D20	2
0 00593	5310-010-0578	WASHER, LOCK: CAP LOCK	A	EA		1					D20	34
0 00594	5310-270-8832	WASHER PLAIN: SPINDLE MTG (00000) 8330821	A	EA		1					D20	17
X20 00595	5310-270-8834	WASHER THRUST: SPINDLE MTG (00000) 8330813	A	EA		2					D20	16
X20 00596		WHEEL: LANDING GEAR (52793) B10746	A	EA		2					D20	26
P 0 00597		SUPPORT ASSEMBLY, RETRACTABLE: TRAILER (00000) 7032127	B	EA		1	*	*	*	*	D20	
P 0 00598		ARM ASSEMBLY: CRANK (00000) 7032135	B	EA		1	*	*	*	*	D20	32
0 00599	5306-225-8497	BOLT, MACHINE: CRANK ARM ASSEMBLY MTG (00000) MS35291-32	B	EA		1					D20	1
0 00600		BOLT, MACHINE: OUTER TUBE TO INNER TUBE MTG (96906) MS35202-111	B	EA		4					D20	24
P 0 00601	5306-174-4246	BOLT, SHOULDER: SWIVEL BRACKET TO FRAME (00000) 7979972	B	EA		1	*	*	*	*	D20	19
X20 00602	2530-693-0736	BRACKET, SWIVEL, WITH SPINDLE (00000) 8331539	B	EA		1					D20	15
X20 00603		FRAME ASSEMBLY: LEG, SUPPORT ASSEMBLY (00000) 7032128	B	EA		1					D20	22
P 0 00604	2590-670-1997	HANDLE: SUPPORT ASSEMBLY (00000) 7979974	B	EA		1	*	*	*	*	D20	23

242-451 1652

(1) SMR CODE / INDEX NO	(2) FEDERAL STOCK NUMBER	(3) DESCRIPTION REFERENCE NO & MFR CODE	USABLE ON CODE	(4) UNIT OF ISSUE	(5) QTY INC IN UNIT PACK	(6) QTY INC IN UNIT	(7) 15-DAY ORGANIZATIONAL MAINTENANCE ALW (a) 1-5	(b) 6-20	(c) 21-50	(d) 51-100	(8) ILLUSTRATION (a) FIG NO	(b) ITEM NO
P 0 00605	2590-937-5286	HANDLE ASSEMBLY: CRANK ARM (00000) 7032136	B	EA		1	*	*	*	*	D20	31
0 00606	5310-982-4908	NUT, SELF-LOCKING, HEXAGON: HANDLE MTG (96906) MS51922-21	B	EA		1					D20	33
0 00607	5310-067-9507	NUT, SELF-LOCKING, HEXAGON: OUTER TUBE TO INNER TUBE MTG (96906) MS51922-37	B	EA		4					D20	36
P 0 00608	5310-045-1023	NUT, SELF-LOCKING, HEXAGON: SWIVEL BRACKET TO FRAME BOLT MTG (00000) 451023	B	EA		1	*	*	*	*	D20	14
P 0 00609	5315-536-3865	PIN, STRAIGHT, HEADLESS: HANDLE MTG (00000) 7979971	B	EA		1	*	*	*	*	D20	4
0 00610	5305-269-2807	SCREW, CAP, HEXAGON HEAD: HANDLE MTG (96906) MS35298-64	B	EA		1					D20	30
X20 00611	2530-699-8489	SPRING, HELICAL, COMPRESSION: HANDLE (00000) 833154	B	EA		1					D20	21
X20 00612		SUPPORT ASSEMBLY: TRAILER (00000) 7032188	B	EA		1					D20	
P 0 00613	2590-679-3675	AXLE, LEVELING JACK (00000) 7032156	B	EA		1	*	*	*	*	D20	27
X20 00614	2590-341-2388	CAP, GEAR HOUSING (00000) 7032131	B	EA		1					D20	9
P 0 00615	3110-100-3682	CONE AND ROLLERS, TAPERED ROLLER BEARING (00000) 705324	B	EA		1	*	*	*	*	D20	
P 0 00616	3110-100-0633	CUP, TAPERED ROLLER BEARING. SCREWSHAFT (00000) 707070	B	EA		1	*	*	*	*	D20	
0 00617	4730-050-4208	FITTING, LUBRICATION: SUPPORT ASSEMBLY, STRAIGHT (96906) MS15003-1	B	EA		1					D20	8
0 00618	4730-172-0034	FITTING, LUBRICATION: SUPPORT ASSEMBLY, 90 DEGREE (00000) MS15003-6	B	EA		1					D20	8

242-451 1652

(1) SMR CODE / INDEX NO	(2) FEDERAL STOCK NUMBER	(3) DESCRIPTION / REFERENCE NO & MFR CODE	USABLE ON CODE	(4) UNIT OF ISSUE	(5) QTY INC IN UNIT PACK	(6) QTY INC IN UNIT	(7) 15-DAY ORGANIZATIONAL MAINTENANCE ALW (a) 1-5	(b) 6 20	(c) 21-50	(d) 51-100	(8) ILLUSTRATION (a) FIG NO	(b) ITEM NO
P 0 00619	2590-679-3153	GEAR SHAFT, BEVEL: HANDLE (00000) 7032133	B	EA		1	*	*	*	*	D20	7
P 0 00620	1440-331-2334	GEAR, BEVEL: SCREWSHAFT (00000) 8020174	B	EA		1	*	*	*	*	D20	12
P 0 00621	5315-543-3714	PIN, GROOVED, HEADLESS: BEVEL GEAR (00000) 443045	B	EA		1	*	*	*	*	D20	11
X20 00622	5315-062-5417	PIN, GROOVED, HEADLESS: LEVELING SCREW SHAFT (00000) 443039	B	EA		1					D20	28
X20 00623	5315-852-4114	PIN, GROOVED, HEADLESS: WHEEL AND HANDLE MTG (00000) 443024	B	EA		1					D20	4
P 0 00624		SCREW, CAP, HEXAGON HEAD: CAP LOCK (00000) 7038131	B	EA		1	*	*	*	*	D20	35
X20 00625	2590-679-3676	SCREWSHAFT, LEVELING (00000) 7032132	B	EA		1					D20	29
X20 00626	5340-331-2340	SPACER, RING: BEVEL GEAR (00000) 8020716	B	EA		1					D20	6
X20 00627	2590-341-2388	SPACER, SLEEVE: SCREW SHAFT (00000) 8020123	B	EA		1					D20	13
X20 00628		TUBE ASSEMBLY, INNER (00000) 7032143	B	EA		1					D20	25
X20 00629		TUBE ASSEMBLY, OUTER (00000) 7032137	B	EA		1					D20	5
P 0 00630	2590-679-3156	WHEEL, METAL TIRE (00000) 7032155	B	EA		2	*	*	*	*	D20	26
P 0 00631	3120-661-9119	BEARING, SLEEVE: WHEEL (00000) 7411030	B	EA		4	*	*	*	2	D10	
X20 00632		WASHER, FLAT: CRANK ARM ASSEMBLY (00000) 7032134	B	EA		1					D20	3
0 00633	5310-012-0214	WASHER, LOCK: CRANK ARM ASSEMBLY MTG (96906) MS35338-26	B	EA		1					D20	2

242-451 1652

(1) SMR CODE / INDEX NO	(2) FEDERAL STOCK NUMBER	(3) DESCRIPTION / REFERENCE NO & MFR CODE	USABLE ON CODE	(4) UNIT OF ISSUE	(5) QTY INC IN UNIT PACK	(6) QTY INC IN UNIT	(7) 15-DAY ORGANIZATIONAL MAINTENANCE ALW (a) 1-5	(b) 6-20	(c) 21-50	(d) 51-100	(8) ILLUSTRATION (a) FIG NO	(b) ITEM NO
X20 00634	5310-693-0738	WASHER, RECESSED: HANDLE (00000) 8331542	B	EA		1					D20	20
P O 00635		WASHER, FLAT: SUPPORT ASSEMBLY MTG (56190) 102215-1	B	EA		1	*	*	*	*	D20	17
00636		GROUP 16 - SPRINGS AND SHOCK ABSORBERS										
00637		1601 - SPRINGS										
X20 00638		BOLT, U: SPRING MTG (98171) NP257A	A	EA		4					D17	17
P O 00639	5306-105-6853	BOLT U: SPRING MTG (56190) 500763-1	B	EA		4	*	*	*	*	D17	17
X20 00640		BUMPER, SPRING (98171) NP251	A	EA		2					D17	4
P O 00641		BUMPER, SPRING (56190) 301249-1	B	EA		2	*	*	*	*	D17	4
X20 00642		CLAMP, SPRING (98171) NP262	A	EA		2					D17	18
P O 00643		CLAMP, SPRING (56190) 500762-1	B	EA		2	*	*	*	*	D17	18
O 00644	5310-010-3030	NUT, PLAIN, HEXAGON: SPRING MTG (98171) 0711177	A	EA		16					D17	21
O 00645	5310-763-8905	NUT, PLAIN, HEXAGON: SPRING MTG, 5/8-18 THD SIZE (96906) MS35690-1022	B	EA		16					D17	21
O 00646	5310-543-5773	NUT, SELF-LOCKING, HEXAGON: SPRING PLATE (36593) 0711174	A	EA		6					D17	9
O 00647	5310-685-1429	NUT, PLAIN, HEXAGON: SPRING PLATE MTG (96906) MS35690-802	B	EA		6					D17	9
X20 00648		PAD, WEAR: SPRING (98171) NP253	A	EA		2					D17	10
P O 00649		PAD, WEAR: SPRING (56190) 301248-1	B	EA		2	*	*	*	*	D17	10

242-451 1652

(1) SMR CODE / INDEX NO	(2) FEDERAL STOCK NUMBER	(3) DESCRIPTION / REFERENCE NO & MFR CODE	USABLE ON CODE	(4) UNIT OF ISSUE	(5) QTY INC IN UNIT PACK	(6) QTY INC IN UNIT	(7) 15-DAY ORGANIZATIONAL MAINTENANCE ALW (a) 1-5	(b) 6-20	(c) 21-50	(d) 51-100	(8) ILLUSTRATION (a) FIG NO	(b) ITEM NO
X20 00650		PLATE, GUIDE: SPRING (98171) NP260	A	EA		4					D17	6
P 0 00651		PLATE, GUIDE: SPRING (56190) 301229	B	EA		4	*	*	*	*	D17	6
X20 00652		SPACER, SPRING (36593) 0711029	A	EA		2					D17	7
P 0 00653		SPACER, SPRING (56190) 102234-1	B	EA		2	*	*	*	*	D17	7
X20 00654	5305-021-4584	SCREW, CAP, HEXAGON HEAD: BUMPER MTG (36593) 0711162	A	EA		4					D17	2
0 00655	5305-068-0502	SCREW, CAP, HEXAGON HEAD: BUMPER MTG, 1/4-20 THD SIZE, 3/4 IN. LG (96906) MS90725-6	B	EA		4					D17	2
0 00656	5305-010-0059	SCREW, CAP, HEXAGON HEAD: GUIDE PLATE MTG (36533) 0711167		EA		6					D17	5
0 00657	5305-071-1777	SCREW, CAP, HEXAGON HEAD: GUIDE PLATE MTG, 1/2-13 THD SIZE, 4 1/4 IN. LG (96906) MS90725-124	B	EA		6					D17	5
X20 00658		SPRING ASSEMBLY: TRAILER (98171) SPS51A	A	EA		2					D17	19
P 0 00659		SPRING ASSEMBLY: TRAILER (56190) 600387-1	B	EA		2	*	*	*	*	D17	19
0 00660	5310-527-3289	WASHER, LOCK: BUMPER MTG (96906) MS35333-23	A	EA		4					D17	3
0 00661	5310-582-5965	WASHER, LOCK: BUMPER MTG, 1/4 IN. SCREW SIZE (96906) MS122032	B	EA		4					D17	3
0 00662	5310-753-4204	WASHER, LOCK: SPRING MTG, 5/8 IN. SCREW SIZE (96906) MS122038	B	EA		8					D17	20
0 00663	5310-688-1601	WASHER, LOCK: SPRING PLATE (96906) MS122036	B	EA		6					D17	8

(1) SMR CODE / INDEX NO	(2) FEDERAL STOCK NUMBER	(3) DESCRIPTION / REFERENCE NO & MFR CODE	USABLE ON CODE	(4) UNIT OF ISSUE	(5) QTY INC IN UNIT PACK	(6) QTY INC IN UNIT	(7) 15-DAY ORGANIZATIONAL MAINTENANCE ALW (a) 1-5	(b) 6-20	(c) 21-50	(d) 51-100	(8) ILLUSTRATION (a) FIG NO	(b) ITEM NO
00664		1604 - SHOCK ABSORBER EQUIPMENT										
0 00665	5340-534-7872	GROMMET, RUBBER: SHOCK ABSORBER MTG (36593) 0711021		EA		8					D17	13
0 00666	5310-685-2246	NUT, SELF-LOCKING, HEXAGON: SHOCK ABSORBER MTG (96906) MS35690-822	A	EA		6					D17	9
0 00667	5310-685-1429	NUT, PLAIN, HEXAGON: SHOCK ABSORBER MTG (96906) MS35690-802	B	EA		6					D17	9
P 0 00668	2540-507-3830	SHOCK ABSORBER, DIRECT ACTION (76445) 12170	A	EA		2	*	*	*	*	D17	12
P 0 00669		SHOCK ABSORBER, DIRECT ACTION (56190) 500764-1	B	EA		2	*	*	*	2	D17	12
X20 00670		STUD, LOWER: SHOCK ABSORBER MTG (36593) 0721025	A	EA		2					D17	16
P 0 00671	5307-105-8692	STUD, LOWER: SHOCK ABSORBER MTG (56190) 301250-1	B	EA		2	*	*	*	2	D17	16
X20 00672		STUD, UPPER: SHOCK ABSORBER MTG (36593) 0711024	A	EA		2					D17	11
P 0 00673	5307-105-8693	STUD, UPPER: SHOCK ABSORBER MTG (56190) 301251-1	B	EA		2	*	*	*	2	D17	11
0 00674	5310-197-3316	WASHER, FLAT: SHOCK ABSORBER MTG (96906) MS15795-218	A	EA		8					D17	14
0 00675	5310-809-5998	WASHER, FLAT: SHOCK ABSORBER MTG (96906) MS27183-18	B	EA		6					D17	14
0 00676	5310-543-4488	WASHER, FLAT: SHOCK ABSORBER MTG (96906) MS15795-220	A	EA		2					D17	15
0 00677	5310-823-8803	WASHER, FLAT: SHOCK ABSORBER MTG (96906) MS27183-21	B	EA		2					D17	15
0 00678	5310-688-1601	WASHER, LOCK: SHOCK ABSORBER MTG (96906) MS122036	B	EA		8					D17	8

242-451 1652

(1) SMR CODE / INDEX NO	(2) FEDERAL STOCK NUMBER	(3) DESCRIPTION REFERENCE NO & MFR CODE	USABLE ON CODE	(4) UNIT OF ISSUE	(5) QTY INC IN UNIT PACK	(6) QTY INC IN UNIT	(7) 15-DAY ORGANIZATIONAL MAINTENANCE ALW (a) 1-5	(b) 6-20	(c) 21-50	(d) 51-100	(8) ILLUSTRATION (a) FIG NO	(b) ITEM NO
00679		GROUP 18 - BODY, CAB, HOOD AND HULL										
00680		1801 - BODY										
X20 00681		BAR, FENDER MOUNTING, LEFT HAND (36593) 0721018	A	EA		1					D21	8
X20 00682		BAR, FENDER MOUNTING, RIGHT HAND (36593) 0721020	A	EA		1					D21	9
X20 00683		BAR, FENDER MOUNTING: REAR (56190) 301252-1	B	EA		2					D22	4
X20 00684		BAR, FENDER MOUNTING: SIDE (56190) 500765-1	B	EA		2					D22	3
X20 00685		BRACKET, FENDER: LEFT HAND (36593) 0721063	A	EA		1					D21	4
X20 00686		BRACKET, FENDER: RIGHT HAND (36593) 0721058	A	EA		1					D21	11
X20 00687		CRADLE, CHOCK (WELDED TO FENDER) (56190) 500741-1		EA		2					D22	9
X20 00688		FENDER, CHASSIS: LEFT HAND (36593) 0741017	A	EA		1					D21	7
P 0 00689		FENDER, CHASSIS: LEFT HAND (56190) 800048-1	B	EA		1	*	*	*	*	D22	8
X20 00690		FENDER, CHASSIS: RIGHT HAND (36593) 0741018	A	EA		1					D21	10
P 0 00691		FENDER, CHASSIS: RIGHT HAND (56190) 800048-2	B	EA		1	*	*	*	*	D22	2
X20 00692		GUARD, SPLASH: LIGHT WIRE (36593) 0711066	A	EA		2					D21	12
X20 00693		NUT, SELF-LOCKING, HEXAGON: FENDER MTG (36593) 0711179	A	EA		6					D21	14

242-451 1652

(1) SMR CODE / INDEX NO	(2) FEDERAL STOCK NUMBER	(3) DESCRIPTION REFERENCE NO & MFR CODE	USABLE ON CODE	(4) UNIT OF ISSUE	(5) QTY INC IN UNIT PACK	(6) QTY INC IN UNIT	(7) 15-DAY ORGANIZATIONAL MAINTENANCE ALW (a) 1-5	(b) 6 20	(c) 21-50	(d) 51-100	(8) ILLUSTRATION (a) FIG NO	(b) ITEM NO
X20 00694		NUT, SELF-LOCKING, HEXAGON: SPLASH GUARD MOUNTING (36593) 0711173	A	EA		8					D21	13
X20 00695		SCREW, CAP, HEXAGON HEAD: FENDER MTG (36593) 0711169	A	EA		14					D21	5
X20 00696		SCREW, CAP, HEXAGON HEAD: FENDER MTG (36593) 0711168	A	EA		32					D21	2
X20 00697		SCREW, CAP, HEXAGON HEAD: SPLASH GUARD MOUNTING (36593) 0711162	A	EA		8					D21	1
0 00698	5305-042-6417	SCREW, CAP, HEXAGON HEAD· FENDER MTG, 1/2-13 THD SIZE, 1 1/2 IN. LG (96906) MS90725-113	B	EA		10					D22	7
0 00699	5305-782-9495	SCREW, CAP, HEXAGON HEAD: FENDER MTG, 1/2-13 THD SIZE, 1 1/4 IN. LG (96906) MS90725-111	B	EA		10					D22	6
0 00700	5305-044-4153	SCREW, CAP, HEXAGON HEAD FENDER MTG, 1/2-13 THD SIZE, 1 IN. LG (96906) MS90725-109	B	EA		2					D22	14
0 00701	5310-013-8549	WASHER, LOCK· FENDER MTG (96906) MS3533-27	A	EA		32					D21	3
0 00702	5310-688-1601	WASHER, LOCK: FENDER MTG (96906) MS122036	B	EA		32					D22	5
0 00703	5310-639-8080	WASHER, LOCK· FENDER MTG (96906) MS3533-29	A	EA		14					D21	6
00704		GROUP 22 - ACCESSOPY ITEMS										
00705		2202 - ACCESSORY ITEMS										
0 00706	5306-150-9221	BOLT, MACHINE· REFLECTOR TO FENDER AND SIDE FRAME MTG., No 10-32 THD SIZE, 15/32 IN LG, HEXAGON HEAD (88044) AN3-3A	B	EA		8					D22	1

(1) SMR CODE / INDEX NO	(2) FEDERAL STOCK NUMBER	(3) DESCRIPTION / REFERENCE NO & MFR CODE	USABLE ON CODE	(4) UNIT OF ISSUE	(5) QTY INC IN UNIT PACK	(6) QTY INC IN UNIT	(7) 15-DAY ORGANIZATIONAL MAINTENANCE ALW (a) 1-5	(b) 6-20	(c) 21-50	(d) 51-100	(8) ILLUSTRATION (a) FIG NO.	(b) ITEM NO.
0 00707	5306-274-2119	BOLT, MACHINE: REFLECTOR TO REAR FRAME MTG, No. 10-32 THD SIZE, 21/32 IN. LG, HEXAGON HEAD (88044) AN3-5A	B	EA		4					D22	1
P 0 00708	2540-733-9458	CHAIN, TOWING: SAFETY (00000) 7339458		EA		2	*	*	*	2	D19	9
X20 00713		CHOCK, WHEEL (6593) 0731097	A	EA		2					D23	
X20 00714		BLOCK, CENTER: WHEEL CHOCK (36593) 0711036	A	EA		1					D23	3
X20 00715		BLOCK, OUTER: WHEEL CHOCK (36593) 0711035	A	EA		6					D23	2
0 00716	5306-358-6518	BOLT, SQUARE-NECK: BLOCK	A	EA		4					D23	1
X20 00717		CHAIN: WHEEL CHOCK (36593) 0721094	A	EA		1					D23	6
0 00718	5310-010-5605	NUT, PLAIN, SQUARE: BLOCK	A	EA		4					D23	5
0 00719	5310-167-0767	WASHER, FLAT: BLOCK (88044) AN970-5	A	EA		4					D23	4
P 0 00720	2540-670-2003	CHOCK, WHEEL (56190) 8343584	B	EA		2	*	*	*	*	D23	
P 0 00721	2540-106-1984	BLOCK, CENTER: WHEEL CHOCK (56190) 301209-2	B	EA		2	*	*	*	2	D23	3
P 0 00722	2540-106-1983	BLOCK, OUTER: WHEEL CHOCK (56190) 301209-1	B	EA		12	*	2	2	3	D23	2
P 0 00723	5306-011-9409	BOLT, SQUARE NECK: WHEEL CHOCK BLOCK, 5/16-18 THD SIZE, 12 IN. LG (56190) 500737-6	B	EA		8	*	2	2	3	D23	1
M 0 00724		CHAIN, WHEEL CHOCK MANUFACTURE FROM:		EA		2					D23	6
P 0 00724A		CHAIN, LINK: 1/4 IN. (65 LINKS REQUIRED FOR EACH CHAIN)		FT			SEE GRP 950				D23	6

242-451 1652

(1) SMR CODE / INDEX NO	(2) FEDERAL STOCK NUMBER	(3) DESCRIPTION REFERENCE NO & MFR CODE	USABLE ON CODE	(4) UNIT OF ISSUE	(5) QTY INC IN UNIT PACK	(6) QTY INC IN UNIT	(7) 15-DAY ORGANIZATIONAL MAINTENANCE ALW (a) 1-5	(b) 6-20	(c) 21-50	(d) 51-100	(8) ILLUSTRATION (a) FIG NO	(b) ITEM NO
P O 00725	5340-741-4347	HOOK, SNAP: WHEEL CHOCK CHAIN (80374) 822	B	EA		2	*	*	*	*	D23	
P O 00726	4010-165-5597	LINK, LAP: WHEEL CHOCK CHAIN, HOOK END (00000) 500970	B	EA		2	*	*	*	*	D23	
P O 00727	4010-171-9736	LINK, CHAIN, END: WHEEL CHOCK END (56190) 7979367	B	EA		2	*	*	*	*		
P O 00728	5310-558-5939	NUT, SELF-LOCKING, HEXAGON: WHEEL CHOCK BLOCK, 5/16-18 THD SIZE (56190) 500737-7	B	EA		8	*	2	2	3	D23	5
P O 00729	5310-087-7493	WASHER, FLAT: WHEEL CHOCK BLOCK, 5/16 IN. SCREW SIZE (96906) MS27183-13	B	EA		8	*	2	2	3	D23	4
O 00730	5310-167-1343	NUT, PLAIN, HEXAGON: REFLECTOR MTG, No. 10-32 THD SIZE (88044) AN315-3R	B	EA		12					D22	13
X20 00731		NUT, SELF-LOCKING, HEXAGON: REFLECTOR MOUNTING (36953) 0711173	A	EA		12					D22	13
X20 00732		NUT, STOP (36953) 0711176	A	EA		2					D19	5
X20 00733	9905-202-3639	REFLECTOR, INDICATING CLEARANCE: AMBER (96906) MS35387-2		EA		4					D22	10
X20 00734	9905-205-2795	REFLECTOR, INDICATING CLEARANCE: RED (96906) MS35387-1		EA		4					D22	10
X20 00735		SCREW, CAP, HEXAGON HEAD: CHAIN MTG (36593) 071170	A	EA		2					D19	8
X20 00736		SCREW, MACHINE: REFLECTOR MTG (36593) 0711161	A	EA		16					D22	1
X20 00737		WASHER, BEVEL (36593) US153	A	EA		2					D19	7
O 00738	5310-655-9800	WASHER, FLAT: REFLECTOR MTG, No 10 SCREW SIZE (88044) AN960-10L	B	EA		12					D22	11

242-451 1652

(1) SMR CODE / INDEX NO	(2) FEDERAL STOCK NUMBER	(3) DESCRIPTION — REFERENCE NO & MFR CODE	USABLE ON CODE	(4) UNIT OF ISSUE	(5) QTY INC IN UNIT PACK	(6) QTY INC IN UNIT	(7) 15-DAY ORGANIZATIONAL MAINTENANCE ALW (a) 1-5	(b) 6-20	(c) 21-50	(d) 51-100	(8) ILLUSTRATION (a) FIG NO	(b) ITEM NO
0 00739	5310-527-3289	WASHER, LOCK: REFLECTOR MTG (96906) MS35333-23	A	EA		12					D22	12
0 00740		WASHER, LOCK: REFLECTOR MTG, No. 10 SCREW SIZE (96906) S122055	B	EA		12					D22	12
0 00741	5310-010-3325	WASHER, LOCK: SAFETY CHAIN	A	EA		1					D19	6
00742		2210 - DATA PLATES										
X20 00746	2590-329-7695	PLATE IDENTIFICATION: EMERGENCY AIR (36593) XBW201500	A	EA		1					D14	24
X20 00747	2590-999-7369	PLATE, IDENTIFICATION: EMERGENCY AIR (96906) MS353007-2	B	EA		1						
X20 00748	2590-774-4284	PLATE, IDENTIFICATION: SERVICE AIR (36593) XBW201499	A	EA		1					D14	24
X20 00749	2590-999-7370	PLATE, IDENTIFICATION: SERVICE AIR (96906) MS53007-1	B	EA		1						
X20 00751		PLATE, IDENTIFICATION: TRANSPORTATION DATA (56190) 301233	B	EA		1						
X20 00752		PLATE, INSTRUCTION: AIR BRAKE RESERVOIR SERVICE (56190) 301234	B	EA		1						
00755		GROUP 95 - GENERAL USE STANDARDIZED PARTS										
00756		9501 - BULK MATERIAL										
P 0 00757		CHAIN, LINK (56190) 500737-5		FT			*	*	*	*		
P 0 00758	5330-233-5846	PAPER, GASKET		YD			*	*	*	*		

242-451 1652

(1) SMR CODE / INDEX NO	(2) FEDERAL STOCK NUMBER	(3) DESCRIPTION REFERENCE NO & MFR CODE USABLE ON CODE	(4) UNIT OF ISSUE	(5) QTY INC IN UNIT PACK	(6) QTY INC IN UNIT	(7) 15-DAY ORGANIZATIONAL MAINTENANCE ALW (a) 1-5	(b) 6 20	(c) 21-50	(d) 51-100	(8) ILLUSTRATION (a) FIG NO	(b) ITEM NO
P 0 00760	4710-277-5529	TUBE COPPER	FT			*	*	*	*		
P 0 00761	4710-277-5527	TUBE, COPPER: SEAMLESS, TYPE N, SPEC WW-T-799, 0.375 IN. OD, 0.046 IN. WALL THK	FT			*	*	*	*		

242-451 1652

(1) SMR CODE / INDEX NO	(2) FEDERAL STOCK NUMBER	(3) DESCRIPTION — REFERENCE NO & MFR CODE	USABLE ON CODE	(4) UNIT OF ISSUE	(5) QTY INC IN UNIT PACK	(6) QTY INC IN UNIT	(7) 30-DAY DS MAINT ALLOWANCE (a) 1-20	(b) 21-50	(c) 51-100	(8) 30-DAY GS MAINT ALLOWANCE (a) 1-20	(b) 21-50	(c) 51-100	(9) 1-YR ALW PER 100 EQUIP CNTOCY	(10) DEPOT MAINT ALW-PER 100 EQUIP	(11) ILLUSTRATION (a) FIG NO.	(b) ITEM NO
00001		SECTION V - REPAIR PARTS LIST FOR DS, GS, AND DEPOT MAINTENANCE														
00002		GROUP 06 - ELECTRICAL SYSTEM														
00003		0609 - LIGHTS														
0 00004	5306-274-2119	BOLT, MACHINE: CLEARANCE LIGHT MTG, HEXAGON HEAD, No. 10-32 THD SIZE, 21/32 IN. LG (88044) AN3-5A	B	EA		30										
P 0 00005	6240-106-0113	LAMP ASSEMBLY: 24v, TAILLIGHT (56190) 301212-1	B	EA		2	*	*	2	*	*	2	10	10	D3	4
P 0 00006	6240-877-3405	LAMP, INCANDESCENT: TAILLIGHT (24455) 1662	B	EA		2	2	4	8	2	4	8	100	90	D3	3
X20 00007		LENS, LAMP: TAILLIGHT (98424) 702H	B	EA		2									D3	2
X20 00008	5310-286-1930	SCREW, MACHINE: TAILLIGHT LENS MTG, No. 8-32 THD SIZE, 1/4 IN. LG	B	EA		6									D3	1
P 0 00009	6620-577-3434	LIGHT, MARKER, CLEARANCE: AMBER (96906) MS35423-1 (SAME AS LIGHT, STOCK No. 6220-726-1916 EXCEPT WHERE INDIVIDUAL COMPONENTS ARE ANNOTATED)		EA		2	*	*	2	*	*	2	8	8	D4	
P 0 00010	6220-577-3435	LIGHT, MARKER, CLEARANCE: BLACKOUT, AMBER (96906) MS35424-1 (SAME AS LIGHT, STOCK No. 6220-726-1916 EXCEPT WHERE INDIVIDUAL COMPONENTS ARE ANNOTATED)		EA		2	*	2	2	*	2	2	20	15	D4	
P 0 00011	6220-727-3288	LIGHT, MARKER, CLEARANCE: BLACKOUT, RED (96906) MS35424-2 (SAME AS LIGHT, STOCK No. 6220-726-1916 EXCEPT WHERE INDIVIDUAL COMPONENTS ARE ANNOTATED)		EA		4	*	2	2	*	2	2	20	15	D4	
P 0 00012	6220-726-1916	LIGHT, MARKER CLEARANCE: RED (96906) MS35423-2		EA		7	*	2	2	*	2	2	20	15	D4	

242-451 1652

(1) SMR CODE / INDEX NO	(2) FEDERAL STOCK NUMBER	(3) DESCRIPTION / REFERENCE NO & MFR CODE / USABLE ON CODE	(4) UNIT OF ISSUE	(5) QTY INC IN UNIT PACK	(6) QTY INC IN UNIT	(7) 30-DAY DS MAINT ALLOWANCE (a) 1-20	(b) 21-50	(c) 51-100	(8) 30-DAY GS MAINT ALLOWANCE (a) 1-20	(b) 21-50	(c) 51-100	(9) 1-YR ALW PER 100 EQUIP CNTGCY	(10) DEPOT MAINT ALW-PER 100 EQUIP	(11) ILLUSTRATION (a) FIG NO	(b) ITEM NO
X20 00013	6220-752-6516	DOOR, CLEARANCE MARKER LIGHT (73331) 5939830	EA		15									D4	2
P O 00014	5330-353-0959	FELT, MECHANICAL PREFORMED: CLEARANCE LIGHT (73331) 5939841	EA		15	*	*	2	*	*	2	10	20	D4	6
X1 00015	6250-650-0012	HARNESS, WIRING ASSEMBLY (73331) 5939837	EA		15										
P O 00016	6240-710-2742	LAMP, INCANDESCENT: MARKER LIGHT (96906) MS15570-1251	EA		15	2	4	8	2	4	8	100	90	D4	4
P O 00017	6220-299-7425	LENS, CLEARANCE MARKER, LIGHT: AMBER (96906) MS35421-1	EA		2	2	2	3	2	2	3	30	60	D4	3
P O 00018	6220-729-9296	LENS, CLEARANCE MARKER, LIGHT: BLACKOUT, AMBER (96906) MS35420-1 (USED ON LIGHT, STOCK NO. 6220-577-3435 ONLY)	EA		2	2	2	3	2	2	3	30	60	D4	3
P O 00019	6220-972-7220	LENS, CLEARANCE MARKER, LIGHT: BLACKOUT, RED (96906) MS35420-2 (USED ON LIGHT, STOCK NO. 6220-727-3288, ONLY)	EA		4	2	2	3	2	2	3	30	60	D4	3
P O 00020	6220-299-7426	LENS, CLEARANCE MARKER: RED (96906) MS35421-2 (USED ON LIGHT, STOCK NO. 6220-726-1916, ONLY)	EA		7	*	*	2	*	*	2	10	8	D4	3
O 00021	5310-596-8169	NUT, SHEET SPRING: LENS MTG (73331) 5939775	EA		30									D4	10
X1 00022	6250-371-4018	PLATE MOUNTING, LAMPHOLDER (73331) 5939831	EA		15									D4	5
O 00023	5305-896-1054	SCREW, MACHINE: DOOR MTG (73331) 134424	EA		30									D4	1
X1 00024	5305-285-4540	SCREW, MACHINE: WIRING HARNESS MTG (73331) 121839	EA		15										
X1 00025	1015-833-8566	SHELL, FEMALE: WIRING HARNESS (00000) 833856	EA		15										
X1 00026	5310-013-1014	WASHER, FLAT: WIRING HARNESS MTG (73331) 131014	EA		15										

(1) SMR CODE / INDEX NO	(2) FEDERAL STOCK NUMBER	(3) DESCRIPTION / REFERENCE NO & MFR CODE	USABLE ON CODE	(4) UNIT OF ISSUE	(5) QTY INC IN UNIT PACK	(6) QTY INC IN UNIT	(7) 30-DAY DS MAINT ALLOWANCE (a) 1-20	(b) 21-50	(c) 51-100	(8) 30-DAY GS MAINT ALLOWANCE (a) 1-20	(b) 21-50	(c) 51-100	(9) 1-YR ALW PER 100 EQUIP CNTGCY	(10) DEPOT MAINT ALW-PER 100 EQUIP	(11) ILLUSTRATION (a) FIG NO.	(b) ITEM NO
X1 00027	5310-833-8567	WASHER, SLOTTED: WIRING HARNESS (00000) 8339567		EA		15										
X20 00028		NUT: CLEARANCE LIGHT MTG (36593) 0711172	A	EA		30									D4	7
0 00029	5310-167-1343	NUT, PLAIN, HEXAGON: CLEARANCE LIGHT MTG, No. 10-32 THD SIZE (88044) AN315-3R	B	EA		30									D4	7
0 00030	5310-584-5005	NUT, PLAIN, HEXAGON: TAILLIGHT MTG, 1/4-20 THD SIZE (96906) MS35690-405	B	EA		4									D3	5
X20 00031		SCREW, CAP, HEXAGON HEAD: BLACKOUT STOP LAMP MTG (36593) 0711163	A	EA		1									D1	7
X20 00032		SCREW, MACHINE: CLEARANCE LIGHT MTG (36593) 0711160	A	EA		30									D4	9
X20 00033		SCREW, CAP, HEXAGON HEAD: STOPLIGHT MTG (36593) 0711164	A	EA		4									D2	1
0 00034		SCREW, CAP, HEXAGON HEAD: STOPLIGHT MTG, 3/8-16 THD SIZE, 3/4 IN. LG (96906) MS35291-58	B	EA		4									D2	1
P 0 00035	6220-337-6471	STOPLIGHT, TAILLIGHT, VEHICULAR (96906) MS51330-1 (SAME AS STOPLIGHT, STOCK NO. 6220-669-5623, EXCEPT WHERE INDIVIDUAL COMPONENTS ARE ANNOTATED)	B	EA		2	2	2	2	2	2	2	30	25	D2	
P 0 00036	6220-669-5623	STOPLIGHT, TAILLIGHT, VEHICULAR (00000) 8378785	A	EA		2	*	*	2	*	*	2	10	8	D2	
X1 00037	6220-368-4945	BODY, LAMP (73331) 7525997		EA		2									D2	3
X20 00038	6220-752-6020	DOOR ASSEMBLY: COMBINATION LAMP (73331) 72526020 (USED ON STOPLIGHT, STOCK NO. 6220-669-5623, ONLY)	A	EA		2									D2	6

242-451 1652

(1) SMR CODE / INDEX NO	(2) FEDERAL STOCK NUMBER	(3) DESCRIPTION / REFERENCE NO & MFR CODE	USABLE ON CODE	(4) UNIT OF ISSUE	(5) QTY INC IN UNIT PACK	(6) QTY INC IN UNIT	(7) 30-DAY DS MAINT ALLOWANCE (a) 1-20	(b) 21-50	(c) 51-100	(8) 30-DAY GS MAINT ALLOWANCE (a) 1-20	(b) 21-50	(c) 51-100	(9) 1-YR ALW PER 100 EQUIP CNTGCY	(10) DEPOT MAINT ALW-PER 100 EQUIP	(11) ILLUSTRATION (a) FIG NO	(b) ITEM NO
X20 00039	6220-752-6018	DOOR ASSEMBLY, BLACKOUT (00000) 7526018 (USED ON STOPLIGHT, STOCK NO. 6220-337-6471, ONLY)	B	EA		2									D2	6
P 0 00040	6240-044-6914	LAMP, INCANDESCENT: BLACKOUT (73331) 446914 (USED ON STOPLIGHT, STOCK NO. 6220-669-5623, ONLY)	A	EA		2	2	2	4	2	2	4	50	20	D2	9
P 0 00041	6240-710-2742	LAMP, INCANDESCENT: STOP AND TURN SIGNAL (96906) MS15570-1251		EA		4	REF	REF	REF	REF	REF	REF	REF	REF	D2	4
P 0 00042	5330-297-7106	PACKING, PREFORMED: LAMP DOOR (73331) 7320658		EA		2	*	*	*	*	*	*	3	5	D2	5
X20 00043	6220-732-0642	RING, RETAINING: DOOR SCREW RETAINING (73331) 5936190		EA		12									D2	8
0 00044	5305-737-5694	SCREW, MACHINE: DOOR MTG (00000) 7320641		EA		12									D2	7
X1 00045	5306-286-1948	SCREW, MACHINE: WIRING HARNESS (73331) 121749		EA		4										
X1 00046	1015-833-8566	SHELL, FEMALE: WIRING HARNESS (00000) 8338566		EA		6										
X1 00047		SOCKET AND WIRE ASSEMBLY (73331) 8378661		EA		2										
X1 00048		WASHER, LOCK: WIRING HARNESS (73331) 121941		EA		4										
X1 00049	5310-833-8567	WASHER, SLOTTED: WIRING HARNESS (00000) 8338567		EA		6										
P 0 00050	6220-846-9745	STOPLIGHT, VEHICULAR: BLACKOUT (96906) MS51302-1	A	EA		1	*	*	*	*	*	*	*	*	D1	
X1 00051		BODY ASSEMBLY: LAMP (73331) 5945740	A	EA		1									D1	1
X20 00052	6220-755-2384	DOOR ASSEMBLY: LAMP (73331) 924984	A	EA		1									D1	4

242-451 1652

(1) SMR CODE / INDEX NO	(2) FEDERAL STOCK NUMBER	(3) DESCRIPTION / REFERENCE NO & MFR CODE	USABLE ON CODE	(4) UNIT OF ISSUE	(5) QTY INC IN UNIT PACK	(6) QTY INC IN UNIT	(7) 30-DAY DS MAINT ALLOWANCE (a) 1-20	(b) 21-50	(c) 51-100	(8) 30-DAY GS MAINT ALLOWANCE (a) 1-20	(b) 21-50	(c) 51-100	(9) 1-YR ALW PER 100 EQUIP CNTGCY	(10) DEPOT MAINT ALW-PER 100 EQUIP	(11) ILLUSTRATION (a) FIG NO	(b) ITEM NO
P 0 00053	6220-678-9047	GASKET: LAMP DOOR (73331) 5942528	A	EA		1	*	*	*	*	*	*	3	5	D1	3
X1 00054	5325-623-0928	INSULATOR, WIRING HARNESS (00000) 7064900	A	EA		2										
P 0 00055	6240-710-2742	LAMP, INCANDESCENT: BLACKOUT STOP (96906) MS15570-1251	A	EA		1	REF	REF	REF	REF	REF	REF	REF	REF	D1	2
0 00056	5305-022-7139	SCREW, MACHINE: LAMP DOOR MTG (73331) 5936222	A	EA		2									D1	5
X1 00057		SCREW, SPECIAL: WIRING HARNESS MTG (73331) 835233	A	EA		2										
X1 00058	2590-797-3496	WIRING HARNESS: BLACKOUT STOP LAMP (73331) 5942524	A	EA		1										
0 00059	5310-639-8061	WASHER, LOCK: BLACKOUT STOP LAMP MTG (96906) MS35333-24	A	EA		1									D1	6
X20 00060		WASHER, LOCK: CLEARANCE LIGHT MTG (36593) 0711178	A	EA		30									D4	8
0 00061	5310-010-6497	WASHER, LOCK: CLEARANCE LIGHT MTG, No. 10 SCREW SIZE (96906) MS122055	B	EA		30									D4	8
0 00062	5310-013-8502	WASHER, LOCK: STOPLIGHT MTG (96906) MS35333-25	A	EA		4									D2	2
0 00063	5310-999-7643	WASHER, LOCK: STOPLIGHT MTG, 3/8 IN. SCREW SIZE (96906) MS122034	B	EA		4									D2	2
0 00064	5310-812-3373	WASHER, LOCK: TAILLIGHT MTG, 1/4 IN. SCREW SIZE	B	EA		4									D3	6
00065		0613 - CHASSIS WIRING HARNESS														
0 00066	5306-150-9221	BOLT, MACHINE: FUSE CLIP TO FENDER MTG, No. 10-32 THD SIZE, 15/32 IN. LG (88044) AN3-3A	B	EA		4									D22	1
0 00067	5306-151-0785	BOLT, MACHINE: WIRING HARNESS TO TRAILER TONGUE CLAMP MTG, No. 10-32 THD SIZE, 29/32 IN. LG (88044) AN3-7A	B	EA		4										

742-451 1652

(1) SMR CODE / INDEX NO	(2) FEDERAL STOCK NUMBER	(3) DESCRIPTION / REFERENCE NO & MFR CODE	USABLE ON CODE	(4) UNIT OF ISSUE	(5) QTY INC IN UNIT PACK	(6) QTY INC IN UNIT	(7) 30-DAY DS MAINT ALLOWANCE (a) 1-20	(b) 21-50	(c) 51-100	(8) 30-DAY GS MAINT ALLOWANCE (a) 1-20	(b) 21-50	(c) 51-100	(9) 1-YR ALW PER 100 EQUIP CNTGCY	(10) DEPOT MAINT ALW-PER 100 EQUIP	(11) ILLUSTRATION (a) FIG NO	(b) ITEM NO
P 0 00068	2590-038-3914	CABLE ASSEMBLY, SPECIAL PURPOSE, ELECTRICAL: CONNECTS TRAILER TO PRIME MOVER (00000) 7728811		EA		1	*	*	2	*	*	2	10	8	D18	1
0 00069	5340-764-7051	CLAMP, LOOP: WIRING HARNESS TO TRAILER TONGUE MTG, 3/8 IN. DIA, No. 10 SCREW SIZE (96906) MS21333-69	B	EA		4										
0 00070	5340-809-1490	CLAMP, LOOP: WIRING HARNESS TO REAR FRAME CROSS MEMBER MTG, 1/4 IN. DIA, 1/4 IN. SCREW SIZE (96906) MS21333-98	B	EA		2										
X20 00071		CLAMP, LOOP: WIRING HARNESS TO FRAME SIDE MEMBERS MTG, 3/8 IN. DIA, 1/4 IN. SCREW SIZE (96906) MS21333-100	B	EA		6										
X20 00072		CLIP, SPRING: PRIME MOVER CONNECTING CABLE STORAGE (36593) 0711119	A	EA		1										
P 0 00073	5340-322-9488	CLIP, SPRING: REAR CLEARANCE LIGHT WIRE MTG (00000) 8378663	A	EA		3	*	*	2	*	*	2	10	30		
X20 00074		CLIP, SPRING: TAILLIGHT WIRE MTG (00000) 7979257	A	EA		2										
X20 00075		CLIP, SPRING: WIRING HARNESS MTG (00000) H004-0327701	A	EA		18										
P 0 00076	5935-773-1428	COVER ASSEMBLY, RECEPTACLE: INTERVEHICULAR CONNECTOR (00000) 7731428		EA		1	*	*	*	*	*	*	5	5	D5	2
X20 00077		FUSE CLIP: CLEARANCE LIGHT CONNECTIONS MTG ON FENDER (00000) 8722869	B	EA		4									D22	15
X20 00078		GROMMET, RUBBER: WIRING HARNESS (36593) 0711124	A	EA		2										
P 0 00079	5325-925-9838	GROMMET, RUBBER: WIRING HARNESS MTG IN TRAILER TONGUE (70485) 559	B	EA			2	2	2	2	2	2	30	25		
X20 00080		HARNESS, WIRING: LEFT HAND (36593) 0731007	A													

242-451 1652

(1) SMR CODE / INDEX NO	(2) FEDERAL STOCK NUMBER	(3) DESCRIPTION / REFERENCE NO & MFR CODE	USABLE ON CODE	(4) UNIT OF ISSUE	(5) QTY INC IN UNIT PACK	(6) QTY INC IN UNIT	(7) 30-DAY DS MAINT ALLOWANCE (a) 1-20	(b) 21-50	(c) 51-100	(8) 30-DAY GS MAINT ALLOWANCE (a) 1-20	(b) 21-50	(c) 51-100	(9) 1-YR ALW PER 100 EQUIP CNTGCY	(10) DEPOT MAINT ALW-PER 100 EQUIP	(11) ILLUSTRATION (a) FIG NO	(b) ITEM NO
0 00093		SCREW, CAP, HEXAGON HEAD: INTERVEHICULAR CONNECTOR AND COVER MTG, 1/4-28 THD SIZE, 7/8 IN. LG (96906) MS35292-7	B	EA		4									D5	1
0 00094		SCREW, CAP, HEXAGON HEAD: WIRING HARNESS TO FRAME REAR CROSS MEMBER MTG, 1/4-28 THD SIZE, 7/8 IN. LG (96906) MS35292-7	B	EA		2										
0 00095		SCREW, CAP, HEXAGON HEAD: WIRING HARNESS TO FRAME SIDE, SIDE MEMBER CLAMP MTG, 1/4-28 THD SIZE, 1 IN. LG (96906) MS35292-8	B	EA		6										
X20 00096		SCREW, CAP, HEXAGON HEAD: RECEPTACLE MOUNTING (36593) 0711162	A	EA		4									D5	1
X20 00097		SCREW, MACHINE: WIRING HARNESS CLIP MTG (36593) 0711160	A	EA		13										
0 00098	5310-655-9800	WASHER, FLAT: FUSE CLIP TO FENDER MTG, No. 10 SCREW SIZE (88044) AN960-10L	B	EA		4									D22	11
0 00099	5310-141-1795	WASHER, FLAT: WIRING HARNESS TO FRAME REAR CROSS MEMBER MTG, 1/4 IN. SCREW SIZE (88044) AN960-416L	B	EA		2										
0 00100		WASHER, LOCK: FUSE CLIP TO FENDER MTG, No. 10 SCREW SIZE (96906) MS122055	B	EA		4									D22	12
0 00101	5310-812-3373	WASHER, LOCK: INTERVEHICULAR CONNECTOR AND COVER MTG, 1/4 IN. SCREW SIZE (96906) MS122057	B	EA		4									D5	4
0 00102	5310-812-3373	WASHER, LOCK: WIRING HARNESS TO FRAME SIDE MEMBER AND REAR CROSS MEMBER MTG, 1/4 IN. SCREW SIZE (96906) MS122057	B	EA		12										
0 00103		WASHER, LOCK: WIRING HARNESS TO TRAILER TONGUE CLAMP MTG, No. 10 SCREW SIZE (96906) MS122055	B	EA		4										

242-451 1652

(1) SMR CODE / INDEX NO	(2) FEDERAL STOCK NUMBER	(3) DESCRIPTION — REFERENCE NO & MFR CODE	USABLE ON CODE	(4) UNIT OF ISSUE	(5) QTY INC IN UNIT PACK	(6) QTY INC IN UNIT	(7) 30-DAY DS MAINT ALLOWANCE (a) 1-20	(b) 21-50	(c) 51-100	(8) 30-DAY GS MAINT ALLOWANCE (a) 1-20	(b) 21-50	(c) 51-100	(9) 1-YR ALW PER 100 EQUIP CNTGCY	(10) DEPOT MAINT ALW-PER 100 EQUIP	(11) ILLUSTRATION (a) FIG NO.	(b) ITEM NO
X20 00081		HARNESS, WIRING: RIGHT HAND (36593) 0731006	A	EA		1										
P 0 00082	2590-105-9878	HARNESS ASSEMBLY, WIRING (56190) 600380-1	B	EA		1	*	2	2	*	2	2	15	12		
P 0 00083	5340-090-5426	BUSHING, RUBBER: INTERVEHICULAR RECEPTACLE (00000) 7722333		EA		1	2	2	3	2	2	3	30	25	D5	7
X20 00084	5935-306-2062	CONNECTOR, RECEPTACLE, ELECTRICAL: INTERVEHICULAR CONNECTING (00000) 8376208		EA		1									D5	3
X20 00085	5935-772-3309	NUT, BUSHING, RETAINING: INTERVEHICULAR RECEPTACLE (00000) 7723309		EA		1									D5	6
0 00086	5940-705-6710	TERMINAL, LUG: INTERVEHICULAR RECEPTACLE GROUNDING (00000) 7056710		EA		2										
0 00087	5310-167-1343	NUT, PLAIN, HEXAGON: FUSE CLIP TO FENDER MTG, No. 10-32 THD SIZE (88044) AN315-3R	B	EA		4									D22	13
0 00088	5310-012-0367	NUT, PLAIN, HEXAGON: INTERVEHICULAR CONNECTOR AND COVER MTG, 1/4-28 THD SIZE (96906) MS35690-425	B	EA		4									D5	5
0 00089	5310-012-0367	NUT, PLAIN, HEXAGON: WIRING HARNESS TO FRAME SIDE MEMBER AND REAR CROSS MEMBER MTG, 1/4-28 THD SIZE (96906) MS35690-425	B	EA		12										
0 00090	5310-167-1443	NUT, PLAIN, HEXAGON: WIRING HARNESS TO TRAILER TONGUE CLAMP MTG, No. 10-32 THD SIZE (88044) AN315-3R	B	EA		4										
X20 00091		NUT, SELF-LOCKING, HEXAGON: CLIP AND RECEPTACLE MTG (36593) 0711173	A	EA		14									D5	5
X20 00092		SCREW, CAP, HEXAGON HEAD: CLIP MTG (36593) 0711161	A	EA		7										

(1) SMR CODE / INDEX NO	(2) FEDERAL STOCK NUMBER	(3) DESCRIPTION / REFERENCE NO & MFR CODE	USABLE ON CODE	(4) UNIT OF ISSUE	(5) QTY INC IN UNIT PACK	(6) QTY INC IN UNIT	(7) 30-DAY DS MAINT ALLOWANCE (a) 1-20	(b) 21-50	(c) 51-100	(8) 30-DAY GS MAINT ALLOWANCE (a) 1-20	(b) 21-50	(c) 51-100	(9) 1-YR ALW PER 100 EQUIP CNTGCY	(10) DEPOT MAINT ALW-PER 100 EQUIP	(11) ILLUSTRATION (a) FIG NO	(b) ITEM NO
00104		GROUP 11 - REAR AXLE														
00105		1108 - STUB AXLES														
X2F 00106		AXLE ASSEMBLY (81336) 11183-6-1	A	EA		1									D6	1
P F 00107	2530-106-4376	AXLE ASSEMBLY (56190) 600376-1	B	EA		1	*	*	*	*	*	*	5	5	D6	1
X2F 00108		BEARING, SLEEVE: SPLIT, AXLE (81336) 11183-10-1	A	EA		2									D6	2
P F 00109	3120-105-6835	BEARING, SLEEVE: SPLIT, AXLE (56190) 500760-1	B	EA		2	*	2	2	*	2	2	20	15	D6	2
X20 00110		FITTING, LUBRICATION: AXLE BEARING (70270) A130		EA		2									D6	6
X2F 00111		HOUSING, BEARING (81336) 11183-10-3	A	EA		2									D6	3
P F 00112	3130-106-6383	HOUSING, BEARING (56190) 500761-3	B	EA		2	*	*	*	*	*	*	5	5	D6	3
X2F 00113	5305-588-6965	SCREW, CAP, HEXAGON HEAD: BEARING HOUSING MTG, 5/8-11 THD SIZE, 1 1/2 IN. LG (96906) MS35291-163	A	EA		8									D6	5
F 00114	5305-051-0827	SCREW, CAP, HEXAGON HEAD: BEARING HOUSING MTG, 5/8-11 THD SIZE, 2 IN. LG (96906) MS90725-164	B	EA		8									D6	5
X2F 00115	5310-013-8502	WASHER, LOCK: BEARING HOUSING MTG, INTERNAL TOOTH, 5/8 IN. SCREW SIZE (96906) MS35338-31	A	EA		8									D6	4
F 00116	5310-753-4204	WASHER, LOCK: BEARING HOUSING MTG, 5/8 IN. SCREW SIZE (96906) MS122038	B	EA		8									D6	4

1652

(1) SMR CODE / INDEX NO	(2) FEDERAL STOCK NUMBER	(3) DESCRIPTION — REFERENCE NO & MFR CODE	USABLE ON CODE	(4) UNIT OF ISSUE	(5) QTY INC IN UNIT PACK	(6) QTY INC IN UNIT	(7) 30-DAY DS MAINT ALLOWANCE (a) 1-20	(b) 21-50	(c) 51-100	(8) 30-DAY GS MAINT ALLOWANCE (a) 1-20	(b) 21-50	(c) 51-100	(9) 1-YR ALW PER 100 EQUIP CNTGCY	(10) DEPOT MAINT ALW-PER 100 EQUIP	(11) ILLUSTRATION (a) FIG NO	(b) ITEM NO
00117		GROUP 12 - BRAKES														
00118		1202 - SERVICE BRAKES														
X2F R 00119		BRAKE ASSEMBLY: RIGHT HAND (63477) FF42611A (SAME AS BRAKE ASSEMBLY, STOCK NO. (63477) FF42610A, EXCEPT WHERE INDIVIDUAL COMPONENTS ARE ANNOTATED)	A	EA		1									D7	
X2F R 00120		BRAKE ASSEMBLY: LEFT HAND (63477) FF42610A	A	EA		1									D7	
X20 00121	2530-741-2079	BOLT, FITTING: WHEEL CYLINDER (63477) FC11409B	A	EA		2	SEE GRP 1204									
0 00122	5306-053-5011	BOLT, MACHINE: BRAKE SHOE MTG (63477) FC12089B	A	EA		1									D7	5
X20 00123	2530-693-1007	BRAKE SHOE, INTERNALLY ACTUATED (63477) FD19223	A	EA		2									D7	
P F 00124	2530-522-4183	LINING, FRICTION: BRAKE (63477) FC14780	B	EA		1	*	*	*	*	*	*	5	25	D7	29
F 00125	5320-209-0490	RIVET, TUBULAR: BRAKE LINING MTG (63477) FC1470K	A	EA		14									D7	28
X2F 00126		SHOE, BRAKE (63477) FE1922A	A	EA		1									D7	17
X20 00127	1450-776-3264	COVER PLATE, ACCESS: CABLE HOLE COVER (00000) 8735729	A	EA		2									D7	11
P 0 00128	2530-021-6234	CYLINDER ASSEMBLY, WHEEL: LEFT HAND (63477) FD9919A (USED ON BRAKE ASSEMBLY, STOCK NO. (63477) FF42610A, ONLY)	A	EA		2	SEE GRP 1204									
P 0 00129	2530-021-6235	CYLINDER ASSEMBLY, WHEEL: RIGHT HAND (63477) FD9920A (USED ON BRAKE ASSEMBLY, STOCK NO. (63477) FF42611A, ONLY)	A	EA		2	SEE GRP 1204									

242 451 1652

242-451 1452

(1) SMR CODE / INDEX NO	(2) FEDERAL STOCK NUMBER	(3) DESCRIPTION / REFERENCE NO & MFR CODE	USABLE ON CODE	(4) UNIT OF ISSUE	(5) QTY INC IN UNIT PACK	(6) QTY INC IN UNIT	(7) 30-DAY DS MAINT ALLOWANCE (a) 1-20	(b) 21-50	(c) 51-100	(8) 30-DAY GS MAINT ALLOWANCE (a) 1-20	(b) 21-50	(c) 51-100	(9) 1-YR ALW PER 100 EQUIP CNTGCY	(10) DEPOT MAINT ALW-PER 100 EQUIP	(11) ILLUSTRATION (a) FIG NO.	(b) ITEM NO
X20 00130	2530-741-1903	FITTING, DISTRIBUTOR: WHEEL CYLINDER TUBE (63477) FC13927G	A	EA		1	SEE GRP 1204									
X20 00131	2530-205-4150	FITTING, HYDRAULIC: WHEEL CYLINDER (63477) FC2579N	A	EA		2	SEE GRP 1204									
P 0 00132	5330-521-4930	GASKET: WHEEL CYLINDER INLET FITTING (63477) FC1243	A	EA		2	SEE GRP 1204									
P 0 00133	5310-820-4450	GASKET: WHEEL CYLINDER INLET FITTING (63477) FC1242C	A	EA		2	SEE GRP 1204									
X20 00134		LEVER ASSEMBLY: EMERGENCY LEFT HAND (63477) FE17748B (USED ON BRAKE ASSEMBLY, STOCK NO. (63477) FF42610A, ONLY)	A	EA		1									D7	
X20 00135		LEVER, EMERGENCY: LEFT HAND (63477) FD17750A (USED ON LEVER ASSEMBLY, STOCK NO. (63477) FE17748B, ONLY)	A	EA		1									D7	26
X20 00136		LEVER, EMERGENCY: RIGHT HAND (63477) FD17751A (USED ON LEVER ASSEMBLY, STOCK NO. (63477) FE17749B, ONLY)	A	EA		1									D7	26
X20 00137		PIN, LINK (63477) FC17758C	A	EA		1									D7	24
X20 00138	5310-722-7260	WASHER C: LINK PIN (63477) FC17757B	A	EA		1									D7	23
X20 00139		WASHER, PLAIN: LINK PIN (63477) FC17756A	A	EA		1									D7	22
X20 00140	5310-952-6919	WASHER, SPRING: LINK PIN (63477) FC17755A	A	EA		1									D7	21
X20 00141		LEVER ASSEMBLY: EMERGENCY RIGHT HAND (63477) FE17749B (USED ON BRAKE ASSEMBLY, STOCK NO. (63477) FF42611A, ONLY) (SAME AS LEVER ASSEMBLY, STOCK NO. (63477) F317748B, EXCEPT WHERE INDIVIDUAL COMPONENTS ARE ANNOTATED)	A	EA		1									D7	

(1) SMR CODE / INDEX NO	(2) FEDERAL STOCK NUMBER	(3) DESCRIPTION — REFERENCE NO & MFR CODE	USABLE ON CODE	(4) UNIT OF ISSUE	(5) QTY INC IN UNIT PACK	(6) QTY INC IN UNIT	(7) 30-DAY DS MAINT ALLOWANCE (a) 1-20	(b) 21-50	(c) 51-100	(8) 30-DAY GS MAINT ALLOWANCE (a) 1-20	(b) 21-50	(c) 51-100	(9) 1-YR ALW PER 100 EQUIP CNTGCY	(10) DEPOT MAINT ALW-PER 100 EQUIP	(11) ILLUSTRATION (a) FIG NO	(b) ITEM NO
X20 00142	2530-774-9041	LINK ASSEMBLY: LEFT HAND (63477) FE17759A (USED ON BRAKE ASSEMBLY, STOCK NO. (63477) FF42610A, ONLY)	A	EA		1									D7	
X20 00143		LINK, EMERGENCY: LEFT HAND (63477) FD17761B (USED ON LINK ASSEMBLY, STOCK NO. 2580-774-9401, ONLY)	A	EA		1									D7	20
X20 00144		LINK, EMERGENCY: RIGHT HAND (63477) FD17762B (USED ON LINK ASSEMBLY, STOCK NO. 2530-774-9402, ONLY)	A	EA		1									D7	20
X20 00145		PIN, LINK: EMERGENCY (63477) FC17758A	A	EA		1									D7	24
X20 00146	5310-722-7260	WASHER C: LINK PIN (63477) FC177578	A	EA		1									D7	23
X20 00147		WASHER, PLAIN: LINK PIN (63477) FC17756A	A	EA		1									D7	22
X20 00148	5301-952-9616	WASHER, SPRING: LINK PIN (63477) FC17755A	A	EA		1									D7	21
X20 00149	2530-774-9402	LINK ASSEMBLY: RIGHT HAND (63477) FE17760A (USED ON BRAKE ASSEMBLY, STOCK NO. (63477) FF42611A, ONLY) (SAME AS LINK ASSEMBLY, STOCK NO. 2530-774-9401, EXCEPT WHERE INDIVIDUAL COMPONENTS ARE ANNOTATED)	A	EA		1									D7	
0 00150	5310-660-2649	NUT, PLAIN, HEXAGON: BRAKE SHOE MTG	A	EA		1									D7	19
0 00151	5310-584-5005	NUT, PLAIN, HEXAGON: CABLE HOLE COVER MTG (00000) 120375	A	EA		4									D7	9
0 00152	5310-208-6829	NUT, PLAIN, HEXAGON: LINK PIN MTG	A	EA		4									D7	15

242 451 1652

(1) SMR CODE / INDEX NO	(2) FEDERAL STOCK NUMBER	(3) DESCRIPTION / REFERENCE NO & MFR CODE	USABLE ON CODE	(4) UNIT OF ISSUE	(5) QTY INC IN UNIT PACK	(6) QTY INC IN UNIT	(7) 30-DAY DS MAINT ALLOWANCE (a) 1-20	(b) 21-50	(c) 51-100	(8) 30-DAY GS MAINT ALLOWANCE (a) 1-20	(b) 21-50	(c) 51-100	(9) 1-YR ALW PER 100 EQUIP CNTGCY	(10) DEPOT MAINT ALW-PER 100 EQUIP	(11) ILLUSTRATION (a) FIG NO.	(b) ITEM NO
X20 00153		PIN, ANCHOR: BRAKE SHOE (63477) FC12088D	A	EA		2									D7	45
X20 00154		PIN, LINK (63477) FC17758A	A	EA		2									D7	24
X2F 00155	2530-679-5770	PLATE ASSEMBLY, WHEEL BRAKE: LEFT HAND (63477) FE19597 (USED ON BRAKE ASSEMBLY, STOCK NO. (63477) FF42610A, ONLY)	A	EA		1									D7	
0 00156	5306-496-2234	BOLT, MACHINE: SUPPORT	A	EA		4									D7	
X20 00157		GEAR, ADJUSTING: BRAKE SHOE (63477) FC14257	A	EA		2									D7	40
0 00158	5310-011-4493	NUT, PLAIN, HEXAGON: ADJUSTING GEAR MOUNTING (63477) FC14257	A	EA		2									D7	42
X2F 00159		PLATE, WHEEL BRAKE: BACKING (63477) FF19577 (USED ON PLATE ASSEMBLY, STOCK NO. 2530-679-5770, ONLY)	A	EA		1									D7	8
X2F 00160		PLATE, WHEEL BRAKE: BACKING (63477) FF19578 (USED ON PLATE ASSEMBLY, STOCK NO. (63477) FE19580, ONLY)	A	EA		1									D7	8
X20 00161	2530-966-5469	STUD ASSEMBLY: ADJUSTING (63477) FC15966A	A	EA		2									D7	
0 00162	5305-523-7535	STUD, ADJUSTING (63477) FC15965	A	EA		1									D7	34
X20 00164	2530-475-1299	WASHER, SPRING: ADJUSTING STUD (63477) FC22218	A	EA		1									D7	33
X20 00165	1440-798-4824	SUPPORT ASSEMBLY: BRAKE SHOE (63477) FD17764A (USED ON PLATE ASSEMBLY, STOCK NO. 2530-679-5770, ONLY)	A	EA		2									D7	

242-451 1652

(1) SMR CODE / INDEX NO	(2) FEDERAL STOCK NUMBER	(3) DESCRIPTION — REFERENCE NO & MFR CODE	USABLE ON CODE	(4) UNIT OF ISSUE	(5) QTY INC IN UNIT PACK	(6) QTY INC IN UNIT	(7) 30-DAY DS MAINT ALLOWANCE (a) 1-20	(b) 21-50	(c) 51-100	(8) 30-DAY GS MAINT ALLOWANCE (a) 1-20	(b) 21-50	(c) 51-100	(9) 1-YR ALW PER 100 EQUIP CNTGCY	(10) DEPOT MAINT ALW-PER 100 EQUIP	(11) ILLUSTRATION (a) FIG NO	(b) ITEM NO
X20 00166	2530-770-9149	WHEEL, STAR: BRAKE ADJUSTING (63477) FC22219	A	EA		1									D7	48
X20 00167	2530-770-9150	SCREW, ADJUSTING: LEFT HAND (63477) FC22220	A	EA		1									D7	47
X20 00168		SUPPORT, BRAKE: LEFT HAND (63477) FE14751	A	EA		1									D7	43
X20 00169		SUPPORT ASSEMBLY: BRAKE SHOE (63477) FD17765 (USED ON PLATE ASSEMBLY, STOCK NO. (63477) FE19580, ONLY)	A	EA		2									D7	
X20 00170	2530-770-9149	WHEEL, STAR: BRAKE ADJUSTING (63477) FC22219	A	EA		1									D7	48
X20 00171	2530-770-9151	SCREW, ADJUSTING: RIGHT HAND (63477) FC22221	A	EA		1									D7	47
X2F 00172		SUPPORT, BRAKE: RIGHT HAND (63477) FE14752	A	EA		1									D7	43
0 00173	5310-186-7510	WASHER, LOCK: ADJUSTING GEAR MTG (78189) 1218-00	A	EA		2									D7	41
0 00174	5310-209-0764	WASHER, LOCK: SUPPORT MTG (78189) 1120-08	A	EA		4									D7	
X20 00175		WASHER, STUD: ADJUSTING GEAR (63477) FC11983	A	EA		4									D7	32
X2F 00176		PLATE ASSEMBLY, WHEEL BRAKE: RIGHT HAND (63477) FE19580 (USED ON BRAKE ASSEMBLY, STOCK NO. (63477) FF42611A, ONLY) (SAME AS PLATE ASSEMBLY, STOCK NO. 2530-679-5770, EXCEPT WHERE INDIVIDUAL COMPONENTS ARE ANNOTATED)	A	EA		1									D7	
0 00177	5305-010-0002	SCREW, CAP, HEXAGON HEAD: BRAKE SHOE MTG	A	EA		1									D7	27
0 00178	5305-269-2803	SCREW, CAP, HEXAGON HEAD: SUPPORT MTG (96906) MS90726-60	A	EA		8									D7	46

242-451 16652

(1) SMR CODE / INDEX NO	(2) FEDERAL STOCK NUMBER	(3) DESCRIPTION — REFERENCE NO & MFR CODE	USABLE ON CODE	(4) UNIT OF ISSUE	(5) QTY INC IN UNIT PACK	(6) QTY INC IN UNIT	(7) 30-DAY DS MAINT ALLOWANCE (a) 1-20	(b) 21-50	(c) 51-100	(8) 30-DAY GS MAINT ALLOWANCE (a) 1-20	(b) 21-50	(c) 51-100	(9) 1-YR ALW PER 100 EQUIP CNTGCY	(10) DEPOT MAINT ALW-PER 100 EQUIP	(11) ILLUS-TRATION (a) FIG NO.	(b) ITEM NO
X20 00179		SHIELD, WHEEL CYLINDER: LEFT HAND (63477) FD9555J (USED ON BRAKE ASSEMBLY, STOCK NO. (63477) FF42610A, ONLY)	A	EA		2	SEE GRP 1204									
X20 00180	9515-529-9824	SHIELD, WHEEL CYLINDER: RIGHT HAND (63477) FD9556J (USED ON BRAKE ASSEMBLY, STOCK NO. (63477) FF42611A, ONLY)	A	EA		2	SEE GRP 1204									
X20 00181	2530-089-6884	SLEEVE, BOLT: BRAKE SHOE MTG (63477) FC13993F	A	EA		2									D7	14
P 0 00182	5340-321-6488	SPRING, RETURN: BRAKE SHOE (63477) FC17763C	A	EA		2	*	*	2	*	*	2	6	10	D7	25
X20 00183	2530-741-1908	TUBE ASSEMBLY, HYDRAULIC CYLINDER: LEFT HAND LOWER (63477) FD13350H (USED ON BRAKE ASSEMBLY, STOCK NO. (63477) FF42610A, ONLY)	A	EA		1	SEE GRP 1204									
X20 00184	2530-741-1906	TUBE ASSEMBLY, HYDRAULIC CYLINDER: LEFT HAND, UPPER (63477) FD13349F (USED ON BRAKE ASSEMBLY, STOCK NO. (63477) FF42610A, ONLY)	A	EA		1	SEE GRP 1204									
X20 00185	2530-741-1909	TUBE ASSEMBLY, HYDRAULIC CYLINDER: RIGHT HAND, LOWER (63477) FD13352G (USED ON BRAKE ASSEMBLY, STOCK NO. (63477) FF42611A, ONLY)	A	EA		1	SEE GRP 1204									
X20 00186	2530-741-1907	TUBE ASSEMBLY, HYDRAULIC CYLINDER: RIGHT HAND, UPPER (63477) FD13351E (USED ON BRAKE ASSEMBLY, STOCK NO. (63477) FF42611A, ONLY)	A	EA		1	SEE GRP 1204									
0 00187	5310-010-3319	WASHER, LOCK: BRAKE SHOE AND CABLE HOLE COVER MTG	A	EA		8									D7	1(
X20 00188	5310-013-6857	WASHER, LOCK: RETURN SPRING PIN, EXTERNAL TOOTH	A	EA		4									D7	1(

1652

(1) SMR CODE / INDEX NO	(2) FEDERAL STOCK NUMBER	(3) DESCRIPTION — REFERENCE NO & MFR CODE	USABLE ON CODE	(4) UNIT OF ISSUE	(5) QTY INC IN UNIT PACK	(6) QTY INC IN UNIT	(7) 30-DAY DS MAINT ALLOWANCE (a) 1-20	(b) 21-50	(c) 51-100	(8) 30-DAY GS MAINT ALLOWANCE (a) 1-20	(b) 21-50	(c) 51-100	(9) 1-YR ALW PER 100 EQUIP CNTGCY	(10) DEPOT MAINT ALW-PER 100 EQUIP	(11) ILLUSTRATION (a) FIG NO	(b) ITEM NO
0 00189	5310-010-3320	WASHER, LOCK: WHEEL CYLINDER MTG	A	EA		4	SEE GRP 1204									
0 00190	5310-964-0234	WASHER, PLAIN: BRAKE SHOE MTG (63477) FC6783	A	EA		4									D7	18
P F 00191	2530-730-7620	BRAKE ASSEMBLY, LEFT HAND: INTERNAL (00000) 8336701 (SAME AS BRAKE ASSEMBLY, STOCK NO. 2530-730-7621, EXCEPT WHERE INDIVIDUAL COMPONENTS ARE ANNOTATED)	B	EA		1	*	*	*	*	*	*	5	5	D7	
P F 00192	2530-730-7621	BRAKE ASSEMBLY, RIGHT HAND: INTERNAL (00000) 8336702	B	EA		1	*	*	*	*	*	*	5	5	D7	
0 00193	5306-741-1760	BOLT, SQUARE NECK: BRAKE SHOE MTG (63477) FC12089	B	EA		2									D7	5
X20 00194	2530-774-9401	BRAKE SHOE, INTERNALLY ACTUATED: LEFT HAND WITH LINK (63477) FE17759 (USED ON BRAKE ASSEMBLY, STOCK NO. 2530-730-7620, ONLY) (SAME AS BRAKE SHOE, STOCK NO. (63477) FE17759 EXCEPT WHERE INDIVIDUAL COMPONENTS ARE ANNOTATED)	B	EA		1									D7	
X20 00195		BRAKE SHOE, INTERNALLY ACTUATED: RIGHT HAND, WITH LINK (63477) FD17760 (USED ON BRAKE ASSEMBLY, STOCK NO. 2530-730-7621, ONLY)	B	EA		1									D7	
X20 00196	2530-693-1007	BRAKE SHOE, INTERNALLY ACTUATED (63477) FD19223	B	EA		2									D7	
X20 00197		SHOE, BRAKE (63477) FE19222	B	EA		2									D7	17
X20 00198	2530-074-2358	LINK, EMERGENCY: LEFT HAND (63477) FD17761 (USED ON BRAKE SHOE, STOCK NO. 2530-774-9401, ONLY)	B	EA		1									D7	20

242-451 1652

(1) SMR CODE / INDEX NO	(2) FEDERAL STOCK NUMBER	(3) DESCRIPTION — REFERENCE NO & MFR CODE	USABLE ON CODE	(4) UNIT OF ISSUE	(5) QTY INC IN UNIT PACK	(6) QTY INC IN UNIT	(7) 30-DAY DS MAINT ALLOWANCE (a) 1-20	(b) 21-50	(c) 51-100	(8) 30-DAY GS MAINT ALLOWANCE (a) 1-20	(b) 21-50	(c) 51-100	(9) 1-YR ALW PER 100 EQUIP CNTGCY	(10) DEPOT MAINT ALW-PER 100 EQUIP	(11) ILLUSTRATION (a) FIG NO.	(b) ITEM NO
X20 00199		LINK, EMERGENCY: RIGHT HAND (63477) FD17762 (USED ON BRAKE SHOE, STOCK NO. (63477) FE17760, ONLY)	B	EA		1									D7	20
X20 00200	2530-322-7261	PIN, SERVICE BRAKE (63477) FC17758	B	EA		4									D7	24
0 00201	5310-903-3993	NUT, PLAIN, HEXAGON: LINK PIN MTG (96906) MS35690-731	B	EA		4									D7	15
X20 00202		WASHER, C: LINK PIN (63477) FC17757	B	EA		2									D7	23
0 00203	5310-209-6641	WASHER, FLAT: LINK PIN (63477) FC17756	B	EA		2									D7	22
0 00204	5310-550-3503	WASHER, LOCK: LINK PIN MTG (96906) MS35335-22	B	EA		4									D7	16
X20 00205		WASHER, SPRING: LINK PIN (63477) FC17755	B	EA		2									D7	21
X20 00206		BRAKE SHOE, INTERNALLY ACTUATED: LEFT HAND, WITH LEVER (63477) FE17748 (USED ON BRAKE ASSEMBLY, STOCK NO. 2530-730-7620, ONLY) (SAME AS BRAKE SHOE, STOCK NO. 2530-798-4850, EXCEPT WHERE INDIVIDUAL COMPONENTS ARE ANNOTATED)	B	EA		1									D7	
X20 00207	2530-798-4850	BRAKE SHOE, INTERNALLY ACTUATED: RIGHT HAND, (USED ON BRAKE ASSEMBLY, STOCK NO. 2530-730-7621, ONLY)	B	EA											D7	
X20 00208	2530-693-1007	BRAKE SHOE, INTERNALLY ACTUATED (63477) FD19223	B	EA		2									D7	
X20 00209		SHOE, BRAKE (63477) FE19222	B	EA		2									D7	17
X20 00210	2530-973-2355	LEVER, LEFT HAND (53477) FD17750 (USED ON BRAKE SHOE, STOCK NO. (63477) FE17748, ONLY)	B	EA		2									D7	26

242-451 1652

(1) SMR CODE / INDEX NO	(2) FEDERAL STOCK NUMBER	(3) DESCRIPTION / REFERENCE NO & MFR CODE	USABLE ON CODE	(4) UNIT OF ISSUE	(5) QTY INC IN UNIT PACK	(6) QTY INC IN UNIT	(7) 30-DAY DS MAINT ALLOWANCE (a) 1-20	(b) 21-50	(c) 51-100	(8) 30-DAY GS MAINT ALLOWANCE (a) 1-20	(b) 21-50	(c) 51-100	(9) 1-YR ALW PER 100 EQUIP CNTGCY	(10) DEPOT MAINT ALW-PER 100 EQUIP	(11) ILLUSTRATION (a) FIG NO	(b) ITEM NO
X20 00211	2530-973-2356	LEVER, RIGHT HAND (63477) FD1775 (USED ON BRAKE SHOE, STOCK NO. 2530-798-4850, ONLY)	B	EA		1									D7	26
0 00212	5310-903-3993	NUT, PLAIN, HEXAGON: LINK PIN MTG (63477) MS35690-731	B	EA		4									D7	15
X20 00213	2530-322-7261	PIN, SERVICE BRAKE (63477) FC17758	B	EA		4									D7	24
X20 00214		WASHER, C: LINK PIN (63477) FC17757	B	EA		2									D7	23
0 00215	5310-209-6641	WASHER, FLAT: LINK PIN (63477) FC17756	B	EA		2									D7	22
0 00216	5310-550-3503	WASHER, LOCK: LINK PIN MTG (63477) MS35335-22	B	EA		4									D7	16
X20 00217		WASHER, SPRING: LINK PIN (63477) FC17755	B	EA		2									D7	21
X20 00218	1450-776-3264	COVER PLATE, ACCESS: CABLE HOLE COVER (00000) 8735729	B	EA		2									D7	11
P 0 00219	2530-771-4500	CYLINDER ASSEMBLY, WHEEL: LEFT HAND UPPER AND RIGHT HAND LOWER (63477) FD9920 (SAME AS CYLINDER ASSEMBLY, STOCK NO. 2530-815-6984)		EA		2	SEE GRP 1204									
P 0 00220	2530-815-6984	CYLINDER ASSEMBLY, WHEEL: RIGHT HAND UPPER AND LEFT HAND LOWER (63477) FD9919		EA		2	SEE GRP 1204									
X20 00221		NUT, PLAIN, HEXAGON: BRAKE SHOE MTG (00000) 11545	B	EA		2									D7	19
P 0 00222	5310-584-5005	NUT, PLAIN, HEXAGON: CABLE HOLE COVER MTG (00000) 120375	B	EA		4	*	*	*	*	*	*	5	5	D7	9
X20 00223	2530-741-2106	PIN, ANCHOR: BRAKE SHOE (63477) FC12088	B	EA		4									D7	

242-451 1652

(1) SMR CODE / INDEX NO	(2) FEDERAL STOCK NUMBER	(3) DESCRIPTION / REFERENCE NO & MFR CODE	USABLE ON CODE	(4) UNIT OF ISSUE	(5) QTY INC IN UNIT PACK	(6) QTY INC IN UNIT	(7) 30-DAY DS MAINT ALLOWANCE (a) 1-20	(b) 21-50	(c) 51-100	(8) 30-DAY GS MAINT ALLOWANCE (a) 1-20	(b) 21-50	(c) 51-100	(9) 1-YR ALW PER 100 EQUIP CNTGCY	(10) DEPOT MAINT ALW-PER 100 EQUIP	(11) ILLUSTRATION (a) FIG NO	(b) ITEM NO
X2F 00224	2530-679-5770	PLATE ASSEMBLY, WHEEL BRAKE: LEFT HAND (63477) FE19579 (SAME AS PLATE ASSEMBLY, STOCK NO. (63477) FE19580, EXCEPT WHERE INDIVIDUAL COMPONENTS ARE ANNOTATED)	B	EA		1									D7	
X2F 00225		PLATE ASSEMBLY, WHEEL BRAKE: RIGHT HAND (63477) FE19580	B	EA		1									D7	
X20 00226	2530-741-2104	GEAR, ADJUSTING, BRAKE SHOE (63477) FC14257		EA		4									D7	40
X1 00227		PLATE, WHEEL BRAKE: BACKING, LEFT HAND (00000) 8733932 (USED ON PLATE ASSEMBLY, STOCK NO. 2530-679-5770, ONLY)	B	EA		1									D7	8
X1 00228		PLATE, WHEEL BRAKE: BACKING, RIGHT HAND (00000) 8733933 (USED ON PLATE ASSEMBLY, STOCK NO. (63477) FE19580, ONLY)	B	EA		1									D7	8
0 00229	5310-543-2641	NUT, PLAIN, HEXAGON: ADJUSTING GEAR MTG (96906) MS35691-522		EA		4									D7	42
0 00230		SCREW, CAP, HEXAGON HEAD: SUPPORT MTG, 3/8-24 THD SIZE, 9/16 IN. LG (96906) MS35304-57	B	EA		8									D7	38
X20 00231	1095-788-6038	STUD ASSEMBLY: ADJUSTING (63477) FC15966	B	EA		4									D7	
X20 00232	5305-523-7535	STUD ADJUSTING (63477) FC15965		EA		4									D7	34
X20 00233	2530-475-1299	WASHER, SPRING: ADJUSTING STUD (63477) FC22218	B	EA		4									D7	33
X20 00234	1440-798-4824	SUPPORT AND ADJUSTER: WHEEL BRAKE PLATE, LEFT HAND (63477) FD17764 (USED ON PLATE ASSEMBLY, STOCK NO. 2530-679-5770, ONLY)	B	EA		2									D7	
P 0 00235	2530-770-9150	SCREW, BRAKE SHOE ADJUSTING: LEFT HAND (63477) FC22220	B	EA		2	*	2	2	*	2	2	15	12	D7	47

(1) SMR CODE / INDEX NO	(2) FEDERAL STOCK NUMBER	(3) DESCRIPTION / REFERENCE NO & MFR CODE	USABLE ON CODE	(4) UNIT OF ISSUE	(5) QTY INC IN UNIT PACK	(6) QTY INC IN UNIT	(7) 30-DAY DS MAINT ALLOWANCE (a) 1-20	(b) 21-50	(c) 51-100	(8) 30-DAY GS MAINT ALLOWANCE (a) 1-20	(b) 21-50	(c) 51-100	(9) 1-YR ALW PER 100 EQUIP CNTGCY	(10) DEPOT MAINT ALW-PER 100 EQUIP	(11) ILLUSTRATION (a) FIG NO	(b) ITEM NO
X20 00236		SUPPORT, BRAKE: LEFT HAND (63477) FE14752	B	EA		2									D7	43
X20 00237	2530-770-9149	WHEEL, STAR: BRAKE ADJUSTING (63477) FC22219		EA		2									D7	48
X20 00238		SUPPORT AND ADJUSTER: WHEEL BRAKE PLATE, RIGHT HAND (63477) FD17765 (USED ON PLATE ASSEMBLY, STOCK NO. (63477) FE19580, ONLY)	B	EA		2									D7	
P 0 00239	2530-770-9151	SCREW, BRAKE SHOE ADJUSTING: RIGHT HAND (63477) FC22221	B	EA		2	*	2	2	*	2	2	15	12	D7	47
X20 00240		SUPPORT, BRAKE: RIGHT HAND (63477) FE14751	B	EA		2									D7	43
X20 00241	2530-770-9149	WHEEL, STAR: BRAKE ADJUSTING (63477) FC22219	B	EA		2									D7	48
X20 00242	5310-741-2120	WASHER, FLAT: ADJUSTING GEAR MTG (63477) FC11983		EA		4									D7	32
0 00243	5310-639-8061	WASHER, LOCK: ADJUSTING GEAR MTG (96906) MS35333-24	B	EA		4									D7	41
0 00244	5310-627-6128	WASHER, LOCK: SUPPORT MTG, EXTERNAL TEETH, 3/8 IN. SCREW SIZE (96906) MS35335-21	B	EA		8									D7	39
P 0 00245	5305-105-6870	SCREW, CAP, HEXAGON HEAD: BRAKE SHOE MTG (00000) 181568	B	EA		2	*	2	2	*	2	2	15	12	D7	27
X20 00246		SCREW, CAP, HEXAGON HEAD: BRAKE WHEEL CYLINDER MTG (00000) 180075	B	EA		8	SEE GRP 1204									
P 0 00247	2530-741-2050	SHIELD, BRAKE WHEEL: LEFT HAND (63477) FD9556 (USED ON BRAKE ASSEMBLY, STOCK NO. 2530-730-7620, ONLY)	B	EA		2	*	*	*	*	*	*	5	5	D7	12
P 0 00248	2530-741-2068	SHIELD, BRAKE WHEEL: RIGHT HAND (63477) FD9555 (USED ON BRAKE ASSEMBLY, STOCK NO. 2530-730-7621, ONLY)	B	EA		2	*	*	*	*	*	*	5	5	D7	12

242-451 1652

(1) SMR CODE / INDEX NO	(2) FEDERAL STOCK NUMBER	(3) DESCRIPTION / REFERENCE NO & MFR CODE	USABLE ON CODE	(4) UNIT OF ISSUE	(5) QTY INC IN UNIT PACK	(6) QTY INC IN UNIT	(7) 30-DAY DS MAINT ALLOWANCE (a) 1-20	(b) 21-50	(c) 51-100	(8) 30-DAY GS MAINT ALLOWANCE (a) 1-20	(b) 21-50	(c) 51-100	(9) 1-YR ALW PER 100 EQUIP CNTGCY	(10) DEPOT MAINT ALW-PER 100 EQUIP	(11) ILLUSTRATION (a) FIG NO	(b) ITEM NO
X20 00249	2530-741-2103	SPACER, SLEEVE: BRAKE SHOE MTG (63477) FC13993	B	EA		4									D7	14
X20 00250		SPRING, RETURN: BRAKE SHOE (63477) FC3471	B	EA		4									D7	
P O 00251	2530-791-8078	TUBE ASSEMBLY, HYDRAULIC CYLINDER: LEFT HAND (63477) FD133346 (USED ON BRAKE ASSEMBLY, STOCK NO. 2530-730-7620, ONLY)	B	EA		1	SEE GRP 1204									
P O 00252	2530-791-8077	TUBE ASSEMBLY, HYDRAULIC CYLINDER: RIGHT HAND (63477) FD133347 (USED ON BRAKE ASSEMBLY, STOCK NO. 2530-730-7621, ONLY)	B	EA		1	SEE GRP 1204									
X20 00253	5310-641-9939	WASHER, FLAT: BRAKE SHOE MTG (00000) 5323088	B	EA		4									D7	18
0 00254	5310-012-0214	WASHER, LOCK: BRAKE WHEEL CYLINDER MTG (00000) 120214	B	EA		8	SEE GRP 1204									
0 00255	5310-543-2705	WASHER, LOCK: CABLE HOLE COVER AND BRAKE SHOE MTG (00000) 120380	B	EA		8									D7	10
P F 00256	2530-322-7256	BRAKE LINING KIT (63477) FC19370		EA		1	*	2	2	*	2	2	20	15		
X1 00257	5320-528-2751	RIVET, TUBULAR: BRAKE LINING MTG (63477) FC1470		EA		60									D7	28
X1 00258	2530-058-1268	LINING, FRICTION: BRAKE (63477) FC14780		EA		4									D7	29
0 00259	5310-732-0559	NUT, PLAIN, HEXAGON: BRAKE BACKPLATE TO AXLE MTG, 3/8-24 THD SIZE (96906) MS51968-8		EA		24									D7	31
0 00260		SCREW, CAP, HEXAGON HEAD: BRAKE BACKPLATE TO AXLE MTG, 3/8-24 THD SIZE, 1 1/2 IN. LG (96906) MS90726-64		EA		16									D7	44
0 00261	5305-269-2803	SCREW, CAP, HEXAGON HEAD: SUPPORT MTG, 3/8-24 THD SIZE, 1 IN. LG (96906) MS90726-60		EA		8									D7	46

C42-451 1652

(1) SMR CODE / INDEX NO	(2) FEDERAL STOCK NUMBER	(3) DESCRIPTION / REFERENCE NO & MFR CODE	USABLE ON CODE	(4) UNIT OF ISSUE	(5) QTY INC IN UNIT PACK	(6) QTY INC IN UNIT	(7) 30-DAY DS MAINT ALLOWANCE (a) 1-20	(b) 21-50	(c) 51-100	(8) 30-DAY GS MAINT ALLOWANCE (a) 1-20	(b) 21-50	(c) 51-100	(9) 1-YR ALW PER 100 EQUIP CNTGCY	(10) DEPOT MAINT ALW-PER 100 EQUIP	(11) ILLUSTRATION (a) FIG NO	(b) ITEM NO
0 00262	5310-627-6128	WASHER, LOCK: BRAKE BACKPLATE TO AXLE MTG, 3/8 IN. SCREW SIZE (96906) MS35335-35		EA		24									D7	30
00263		1204 - HYDRAULIC BRAKE SYSTEM														
X20 00264	2530-563-8316	ADAPTER, MASTER CYLINDER OUTLET (63477) FC2832	A	EA		1									D12	23
X20 00265		ADAPTER, TUBE TO HOSE: TO WHEEL CYLINDER (45681) 4GBUS	A	EA		2									D10	11
X20 00266	2530-741-2079	BOLT, FITTING: WHEEL CYLINDER INLET (63477) FC114098	A	EA		4									D7	1
P 0 00267		BOLT, FITTING: WHEEL CYLINDER INLET (63477) 7412079	B	EA		2	*	2	2	*	2	2	20	15	D11	3
0 00268	5306-274-2119	BOLT, MACHINE: HYDRAULIC TUBE CLAMP MTG (88044) AN3-5A	B	EA		5									D11	1
0 00269	4730-202-7205	CLAMP, HOSE: MASTER CYLINDER VENT (40342) 22X16	A	EA		1									D12	17
P 0 00270	2530-107-2999	CLAMP, HOSE: MASTER CYLINDER VENT (40342) 502913	B	EA		1	*	2	2	*	2	2	15	20	D12	17
X20 00271	5340-282-7519	CLAMP, LOOP: HYDRAULIC BRAKE LINE TO FRAME MTG (96906) MS21333-34	B	EA		6									D11	12
X20 00272	5340-764-7051	CLAMP, LOOP: HYDRAULIC HOSE TO FRAME MTG (96906) MS21333-69	B	EA		2									D11	27
P 0 00273	5340-371-4134	CLIP, SPRING TENSION: HYDRAULIC LINE TEE MTG (63477) FC3052	B	EA		2	*	2	2	*	2	2	20	15	D11	25
X20 00274		CLIP, SPRING: HYDRAULIC TUBE MTG (36593) CR85	A	EA		5									D10	6
P 0 00275	2530-106-1749	CONNECTOR ASSEMBLY: MASTER CYLINDER OUTLET (63477) 5156653		EA		1	*	*	*	*	*	*	5	5	D11	22

(1) SMR CODE / INDEX NO	(2) FEDERAL STOCK NUMBER	(3) DESCRIPTION / REFERENCE NO & MFR CODE	USABLE ON CODE	(4) UNIT OF ISSUE	(5) QTY INC IN UNIT PACK	(6) QTY INC IN UNIT	(7) 30-DAY DS MAINT ALLOWANCE (a) 1-20	(b) 21-50	(c) 51-100	(8) 30-DAY GS MAINT ALLOWANCE (a) 1-20	(b) 21-50	(c) 51-100	(9) 1-YR ALW PER 100 EQUIP CNTGCY	(10) DEPOT MAINT ALW-PER 100 EQUIP	(11) ILLUSTRATION (a) FIG NO	(b) ITEM NO
X20 00276		COVER, WHEEL, CYLINDER: LEFT HAND (63477) FD9555J	A	EA		2									D7	
X20 00277		COVER, WHEEL, CYLINDER: RIGHT HAND (63477) FD9556J	A	EA		2									D7	
P O R 00278	2530-106-1748	CYLINDER ASSEMBLY, MASTER (63477) FE14240 (INCLUDES COMPONENTS OF PARTS KIT STOCK NO. 2530-326-0129)		EA		1	*	*	*	*	*	*	2	4	D12	20
X1 00279		BODY, CYLINDER ASSEMBLY (53477) FC5903		EA		1									D8	1
X20 00280	4730-773-2163	CAP, FILLER (63477) FC14324		EA		1									D12	18
O 00281	5310-737-3354	WASHER, FLAT: FILLER CAP (63477) FC3587		EA		1									D12	19
P O R 00282	2530-021-6234	CYLINDER ASSEMBLY, WHEEL: LEFT HAND (63477) FD9919A (INCLUDES COMPONENTS OF PARTS KIT, STOCK NO. 2530-741-2066)	A	EA		2	*	*	*	*	*	*	4	8	D7	
X20 00283	5305-361-5112	BLEEDER VALVE, HYDRAULIC BRAKE (63477) FC11410	A	EA		1									D9	6
X1 00284		BODY, CYLINDER (63477) FD10122	A	EA		1									D9	7
X2F 00285	2530-273-7126	LINK, WHEEL CYLINDER HYDRAULIC BRAKE (63477) FC12091	A	EA		2									D9	1
X2F 00286	1190-773-1511	SPRING, PISTON (63477) FC14543	A	EA		1									D9	5
P O R 00287	2530-021-6235	CYLINDER ASSEMBLY, WHEEL: RIGHT HAND (63477) FD9920A (SAME AS CYLINDER ASSEMBLY, STOCK NO. 2530-021-6234)	A	EA		2	*	*	*	*	*	*	4	8	D7	
P O 00288	2530-771-4500	CYLINDER ASSEMBLY, WHEEL: LEFT HAND UPPER AND RIGHT HAND LOWER (63477) FD9920 (SAME AS CYLINDER ASSEMBLY, STOCK NO. 2530-815-6984)	B	EA		2	*	2	2	*	2	2	20	15	D7	13

(1) SMR CODE / INDEX NO	(2) FEDERAL STOCK NUMBER	(3) DESCRIPTION: REFERENCE NO & MFR CODE	USABLE ON CODE	(4) UNIT OF ISSUE	(5) QTY INC IN UNIT PACK	(6) QTY INC IN UNIT	(7) 30-DAY DS MAINT ALLOWANCE (a) 1-20	(b) 21-50	(c) 51-100	(8) 30-DAY GS MAINT ALLOWANCE (a) 1-20	(b) 21-50	(c) 51-100	(9) 1-YR ALW PER 100 EQUIP CNTGCY	(10) DEPOT MAINT ALW-PER 100 EQUIP	(11) ILLUSTRATION (a) FIG NO	(b) ITEM NO
P 0 00289	2530-815-6984	CYLINDER ASSEMBLY, WHEEL: RIGHT HAND UPPER AND LEFT HAND LOWER (63477) FD9919	B	EA		2	*	2	2	*	2	2	20	15	D7	13
P 0 00290	2530-737-3260	BLEEDER VALVE, HYDRAULIC BRAKE: WHEEL CYLINDER (63477) FC11596	B	EA		4	*	2	2	*	2	2	15	15	D9	6
X1 00291		BODY, CYLINDER (63477) FD10122	B	EA		4									D9	7
X1 00292	2530-755-2943	BOOT, DUST AND MOISTURE: WHEEL CYLINDER (63477) FC12054	B	EA		8									D9	2
X20 00293	2530-273-7126	LINK, WHEEL CYLINDER (63477) FC12091	B	EA		8									D9	1
X1 00294	2530-778-0456	PISTON ASSEMBLY: WHEEL CYLINDER (63477) FC14430	B	EA		8									D9	3
X1 00295	2530-778-0455	CUP, HYDRAULIC BRAKE CYLINDER (63477) FD14451	B	EA		8									D9	4
X1 00296		EXPANDER: WHEEL CYLINDER PISTON (63477) FC14444	B	EA		8										
X1 00297		PISTON: WHEEL CYLINDER (63477) FC14437	B	EA		8										
X1 00298	1190-773-1511	SPRING, RETURN: WHEEL CYLINDER (63477) FC14543	B	EA		4									D9	5
0 00299	7430-289-0051	ELBOW, PIPE TO TUBE: TO WHEEL CYLINDER (00000) 504258	A	EA		2									D10	2
X20 00300	2530-741-1903	FITTING, DISTRIBUTOR: WHEEL CYLINDER TUBE (63477) FC13927G	A	EA		2									D7	36
P 0 00301	4730-309-3852	FITTING, DISTRIBUTOR: WHEEL CYLINDER TUBE (63477) FC6952	B	EA		2	*	2	2	*	2	2	20	15	D11	5
X20 00302	2530-215-4150	FITTING, HYDRAULIC: WHEEL CYLINDER (63477) FC2579C	A	EA		4									D7	3
P 0 00303	3895-732-1054	GASKET: WHEEL CYLINDER DISTRIBUTOR FITTING (63477) 5208653	B	EA		2	*	2	2	*	2	2	20	15	D11	6
P 0 00304	5325-925-9838	GROMMET, RUBBER: MASTER CYLINDER TO TEE TUBE MTG (70485) 559	B	EA		1	REF	REF	REF	REF	REF	REF	REF	REF	D11	20

242-451 1652

(1) SMR CODE / INDEX NO	(2) FEDERAL STOCK NUMBER	(3) DESCRIPTION / REFERENCE NO & MFR CODE	USABLE ON CODE	(4) UNIT OF ISSUE	(5) QTY INC IN UNIT PACK	(6) QTY INC IN UNIT	(7) 30-DAY DS MAINT ALLOWANCE (a) 1-20	(b) 21-50	(c) 51-100	(8) 30-DAY GS MAINT ALLOWANCE (a) 1-20	(b) 21-50	(c) 51-100	(9) 1-YR ALW PER 100 EQUIP CNTGCY	(10) DEPOT MAINT ALW-PER 100 EQUIP	(11) ILLUSTRATION (a) FIG NO	(b) ITEM NO
0 00305	5325-276-6040	GROMMET, RUBBER: TEE TO TEE HYDRAULIC TUBE MTG (96906) AN931-66-10		EA		1									D11	7
P 0 00306	4720-911-1875	HOSE ASSEMBLY: HYDRAULIC TEE TO WHEEL (63477) 5276856	B	EA		2	*	2	2	*	2	2	20	15	D11	2
X20 00307		HOSE ASSEMBLY: TO WHEEL CYLINDER (45681) 220601-1	A	EA		2									D10	1
X20 00308	4720-767-9036	HOSE, BREATHER: MASTER CYLINDER (06271) 18X900	A	EA		1									D12	24
P 0 00309	4720-809-2750	HOSE, RUBBER: MASTER CYLINDER VENT (40342) 8365425	B	EA		1	*	2	2	*	2	2	15	12	D12	24
0 00310	4730-592-4225	INVERTED NUT, TUBE COUPLING: MASTER CYLINDER OUTLET (63477) FC2577	A	EA		1									D12	22
0 00311	4730-993-4989	NIPPLE, TUBE: HYDRAULIC TUBE (45681) 4HBUS	A	EA		1									D10	7
0 00312	5310-167-1343	NUT, PLAIN, HEXAGON: HYDRAULIC TUBE CLAMP MTG (88044) AN315-3R	B	EA		8									D11	9
X20 00313	5310-584-5539	NUT, PLAIN, HEXAGON: MASTER CYLINDER MTG (24617) 174855	A	EA		3									D12	11
0 00314	5310-515-8052	NUT, SELF-LOCKING, HEXAGON: HYDRAULIC LINE TEE TO TONGUE MTG (96906) MS20365-428	B	EA		1									D11	19
X20 00315		NUT, SELF-LOCKING, HEXAGON: HYDRAULIC TUBE CLIP MTG (36593) 0711172	A	EA		5									D10	14
P F 00316	2530-741-2066	PARTS KIT: WHEEL CYLINDER (63477) FC13635	A	EA		4	*	2	2	*	2	2	20	400		
X1 00317	2530-755-2943	BOOT, WHEEL CYLINDER (63477) FC12054	A	EA		2									D9	2
X1 00318	2530-778-0455	CUP, PISTON (63477) FD14451	A	EA		2									D9	4
X1 00319	2530-778-0456	PISTON ASSEMBLY, WHEEL CYLINDER (63477) FC14430	A	EA		2									D9	3

(1) SMR CODE / INDEX NO	(2) FEDERAL STOCK NUMBER	(3) DESCRIPTION / REFERENCE NO & MFR CODE	USABLE ON CODE	(4) UNIT OF ISSUE	(5) QTY INC IN UNIT PACK	(6) QTY INC IN UNIT	(7) 30-DAY DS MAINT ALLOWANCE (a) 1-20	(b) 21-50	(c) 51-100	(8) 30-DAY GS MAINT ALLOWANCE (a) 1-20	(b) 21-50	(c) 51-100	(9) 1-YR ALW PER 100 EQUIP CNTGCY	(10) DEPOT MAINT ALW-PER 100 EQUIP	(11) ILLUSTRATION (a) FIG NO	(b) ITEM NO
P F 00320	2530-026-0219	PARTS KIT: MASTER CYLINDER REPAIR (63477) FC13625		EA		1	*	*	*	*	*	*	5	100		
X1 00321	2530-026-0219	BOOT, MASTER CYLINDER (63477) FD14048		EA		1									D8	9
X1 00322	2530-374-2231	CUP, HYDRAULIC MASTER CYLINDER (63477) FD4504		EA		1									D8	5
X1 00323	2530-378-7733	PISTON ASSEMBLY, HYDRAULIC BRAKE (63477) FC5910		EA		1									D8	6
X1 00324	2530-447-9010	CUP, HYDRAULIC BRAKE CYLINDER (63477) FD4505		EA		1										
X1 00325	2530-537-9958	PISTON (63477) FC5911		EA		1										
X1 00326	5340-385-0992	RING, RETAINING (63477) FC5917		EA		1									D8	8
X1 00327	2530-537-9958	SPRING, HELICAL, COMPRESSION (63477) FC5908		EA		1									D8	4
X1 00328	3810-779-3796	VALVE ASSEMBLY, CHECK (63477) FC14423		EA		1									D8	3
X1 00329	2530-574-8355	SEAT, CHECK VALVE (63477) FC14265		EA		1										
X1 00330		VALVE (63477) FC14259		EA		1										
X1 00331	5310-262-2957	WASHER, FLAT: STOP (63477) FC5916		EA		1									D8	7
X1 00332	2530-026-0219	WASHER: NONMETALLIC (63477) FC5915		EA		1									D8	2
P O 00333		PLUG, MACHINE THREAD: HYDRAULIC LINES TEE, HEXAGON HEAD (63477) 8681560	B	EA		1	*	2	2	*	2	2	20	15	D11	16
P O 00334	4730-293-7947	PLUG, MACHINE THREAD: HYDRAULIC LINES TEE, HEXAGON HEAD (04255) 131X4	B	E		1	*	2	2	*	2	2	20	15	D11	26

742-451 1652

(1) SMR CODE / INDEX NO	(2) FEDERAL STOCK NUMBER	(3) DESCRIPTION / REFERENCE NO & MFR CODE	USABLE ON CODE	(4) UNIT OF ISSUE	(5) QTY INC IN UNIT PACK	(6) QTY INC IN UNIT	(7) 30-DAY DS MAINT ALLOWANCE (a) 1-20	(b) 21-50	(c) 51-100	(8) 30-DAY GS MAINT ALLOWANCE (a) 1-20	(b) 21-50	(c) 51-100	(9) 1-YR ALW PER 100 EQUIP CNTGCY	(10) DEPOT MAINT ALW-PER 100 EQUIP	(11) ILLUSTRATION (a) FIG NO.	(b) ITEM NO
X20 00335		SCREW, CAP, HEXAGON HEAD: BRAKE WHEEL CYLINDER MTG (00000) 180075	B	EA		8									D7	6
0 00336	5305-012-3456	SCREW, CAP, HEXAGON HEAD: HYDRAULIC LINE TEE TO TONGUE MTG (96906) MS35292-7	B	EA		1									D11	17
0 00337	5305-267-8974	SCREW, CAP, HEXAGON HEAD: TUBE CLAMP TO FRAME SIDE MTG (96906) MS35292-8	B	EA		3									D11	14
X20 00338	5305-018-1656	SCREW, CAP, HEXAGON: WHEEL CYLINDER MTG	A	EA		8									D7	6
X20 00339		SCREW, MACHINE: HYDRAULIC TUBE CLIP MTG (36593) 0711160	A	EA		5									D10	5
P 0 00340	4730-106-4407	TEE: HYDRAULIC LINES, TRAILER TONGUE (63477) 5167157	B	EA		1	*	2	2	*	2	2	20	15	D11	15
P 0 00341	4730-106-5526	TEE: HYDRAULIC LINES (63477) 10893148	B	EA		2	*	2	2	*	2	2	20	15	D11	8
X20 00342		TEE, TUBE: HYDRAULIC BRAKE (45681) 4JBUS	A	EA		1									D10	3
P 0 00343	2530-791-8078	TUBE ASSEMBLY, HYDRAULIC CYLINDER: LEFT HAND (63477) FD13346 (USED ON BRAKE ASSEMBLY, STOCK NO. 2530-730-7620, ONLY)	B	EA		1	*	*	*	*	*	*	5	5	D7	
P 0 00344	2530-791-8077	TUBE ASSEMBLY, HYDRAULIC CYLINDER: RIGHT HAND (63477) FD13347 (USED ON BRAKE ASSEMBLY, STOCK NO. 2530-730-7621, ONLY)	B	EA		1	*	*	*	*	*	*	5	5	D7	
P 0 00345	4730-359-0230	BOLT, FITTING: WHEEL CYLINDER INLET (63477) FC11409	B	EA		4	*	2	2	*	2	2	20	15	D7	1
P 0 00346	1190-773-1513	FITTING, WHEEL (63477) FC2579M	B	EA		4	*	2	2	*	2	2	20	15	D7	3
P 0 00347	2530-741-1903	FITTING, DISTRIBUTOR: WHEEL CYLINDER (63477) FC13927	B	EA		2	*	2	2	*	2	2	20	15	D7	36

(1) SMR CODE / INDEX NO	(2) FEDERAL STOCK NUMBER	(3) DESCRIPTION — REFERENCE NO & MFR CODE	USABLE ON CODE	(4) UNIT OF ISSUE	(5) QTY INC IN UNIT PACK	(6) QTY INC IN UNIT	(7) 30-DAY DS MAINT ALLOWANCE (a) 1-20	(b) 21-50	(c) 51-100	(8) 30-DAY GS MAINT ALLOWANCE (a) 1-20	(b) 21-50	(c) 51-100	(9) 1-YR ALW PER 100 EQUIP CNTGCY	(10) DEPOT MAINT ALW-PER 100 EQUIP	(11) ILLUSTRATION (a) FIG NO	(b) ITEM NO
X20 00348	2530-741-1906	TUBE ASSEMBLY, METAL: LEFT HAND, LOWER (63477) FD13349 (USED ON TUBE ASSEMBLY, STOCK NO. 2530-791-8078, ONLY)	B	EA		1									D7	37
P O 00349	2530-566-7134	TUBE ASSEMBLY, METAL: LEFT HAND, UPPER (63477) FD13350 (USED ON TUBE ASSEMBLY, STOCK NO. 2530-791-8078, ONLY)	B	EA		1	*	*	*	*	*	*	5	5	D7	35
P O 00350		TUBE ASSEMBLY, METAL: RIGHT HAND, LOWER (63477) FD13352 (USED ON TUBE ASSEMBLY, STOCK NO. (63477) FD19947, ONLY)	B	EA		1	*	*	*	*	*	*	5	5	D7	35
P O 00351	2530-741-1907	TUBE ASSEMBLY, METAL: RIGHT HAND, UPPER (63477) FD13351 (USED ON TUBE ASSEMBLY, STOCK NO. (63477) FD19947, ONLY)	B	EA		1	*	*	*	*	*	*	5	5	D7	37
P O 00352	5310-274-4544	WASHER, FLAT: WHEEL CYLINDER INLET FITTING, OUTER (63477) FC1242	B	EA		4	*	2	2	*	2	2	20	15	D7	2
P O 00353	5310-741-2088	WASHER, REAR: WHEEL CYLINDER INLET FITTING, INNER (00000) 7412088	B	EA		4	*	2	2	*	2	2	20	15	D7	4
X20 00354	2530-741-1908	TUBE ASSEMBLY, HYDRAULIC CYLINDER: LEFT HAND, LOWER (63477) FD13350H	A	EA		1									D7	
X20 00355	2530-741-1906	TUBE ASSEMBLY, HYDRAULIC CYLINDER: LEFT HAND, UPPER (63477) FD11349F	A	EA		1									D7	35
X20 00356	2530-741-1909	TUBE ASSEMBLY, HYDRAULIC CYLINDER: RIGHT HAND, LOWER (63477) FD13352G	A	EA		1									D7	37
X20 00357	2530-741-1907	TUBE ASSEMBLY, HYDRAULIC CYLINDER: RIGHT HAND, UPPER (63477) FD13351E	A	EA		1									D7	35
X20 00358	4720-511-1692	TUBE ASSEMBLY, VENT: MASTER CYLINDER (06721) N12988	A	EA		1									D12	16
P O 00359	2530-511-1692	TUBE ASSMEBLY, VENT: MASTER CYLINDER (40342) 8365426	B	EA		1	*	*	*	*	*	*	5	5	D12	16

(1) SMR CODE / INDEX NO	(2) FEDERAL STOCK NUMBER	(3) DESCRIPTION / REFERENCE NO & MFR CODE	USABLE ON CODE	(4) UNIT OF ISSUE	(5) QTY INC IN UNIT PACK	(6) QTY INC IN UNIT	(7) 30-DAY DS MAINT ALLOWANCE (a) 1-20	(b) 21-50	(c) 51-100	(8) 30-DAY GS MAINT ALLOWANCE (a) 1-20	(b) 21-50	(c) 51-100	(9) 1-YR ALW PER 100 EQUIP CNTGCY	(10) DEPOT MAINT ALW-PER 100 EQUIP	ILLUSTRATION (a) FIG NO.	(b) ITEM NO
X20 00360		TUBE: CROSS MEMBER (91340) A12281	A	EA		1									D10	12
X20 00361		TUBE: CROSS MEMBER TO FRONT FRAME (91340) A12280	A	EA		1									D10	4
X20 00362		TUBE: HYDRAULIC BRAKE TEE TO WHEEL CYLINDER (91340) A12282	A	EA		1									D10	10
X20 00363		TUBE: MASTER CYLINDER TO UNION (91340) A12279	A	EA		1									D10	8
MFO 00364		TUBE, HYDRAULIC: CROSS MEMBER (56190) 500754-1 MANUFACTURE FROM:	B	EA		1									D11	24
P F 00364A	4710-200-0289	TUBE, STEEL (5 FT 7 IN. REQUIRED)		FT			SEE GRP 9501									
MFO 00365		TUBE, HYDRAULIC: CROSS MEMBER TO TONGUE TEE (56190) 500755-1 MANUFACTURE FROM:	B	EA		1									D11	11
P F 00365A	4710-200-0289	TUBE, STEEL (7 FT REQUIRED)		FT			SEE GRP 9501									
MFO 00366		TUBE, HYDRAULIC: MASTER CYLINDER TO TEE (56190) 301242-1 MANUFACTURE FROM:	B	EA		1									D11	21
P F 00366A	4710-200-0289	TUBE, STEEL, (18 IN REQUIRED)		FT			SEE GRP 9501									
X20 00367		TUBE, YLON: HYDRAULIC TUBE COVER (36593) 0711039	A	EA		1									D10	9
0 00368	5310-167-0835	WASHER, FLAT: HYDRAULIC LINE TEE TO TONGUE MTG (88044) AN960-416L	B	EA		1									D11	18
0 00369	5310-655-9800	WASHER, FLAT: HYDRAULIC TUBE CLAMP MTG (88044) AN960-10L	B	EA		8									D11	13
0 00370	5310-167-0834	WASHER, FLAT: HYDRAULIC TUBE CLIP MTG (81352) AN960-10L	A	EA		5									D10	13

242-451 1652

(1) SMR CODE / INDEX NO	(2) FEDERAL STOCK NUMBER	(3) DESCRIPTION — REFERENCE NO & MFR CODE	USABLE ON CODE	(4) UNIT OF ISSUE	(5) QTY INC IN UNIT PACK	(6) QTY INC IN UNIT	(7) 30-DAY DS MAINT ALLOWANCE (a) 1-20	(b) 21-50	(c) 51-100	(8) 30-DAY GS MAINT ALLOWANCE (a) 1-20	(b) 21-50	(c) 51-100	(9) 1-YR ALW PER 100 EQUIP CNTGCY	(10) DEPOT MAINT ALW-PER 100 EQUIP	(11) ILLUSTRATION (a) FIG NO	(b) ITEM NO
0 00371	5310-247-4196	WASHER, FLAT: MASTER CYLINDER OUTLET (63477) FC17	A	EA		1									D12	21
0 00372	5330-105-6861	WASHER, FLAT: MASTER CYLINDER OUTLET (63477) 5214539	B	EA		1									D11	23
P 0 00373	5310-359-0458	WASHER, FLAT: WHEEL CYLINDER INLET FITTING (63477) FC1243	A	EA		4	2	3	5	2	3	5	60	400	D7	4
P 0 00374	5310-820-4450	WASHER, FLAT: WHEEL CYLINDER INLET FITTING (63477) FC1242C	A	EA		4	2	3	5	2	3	5	60	400	D7	2
0 00375	5310-012-0214	WASHER, LOCK: BRAKE WHEEL CYLINDER MTG (00000) 120214	B	EA		8									D7	7
0 00376		WASHER, LOCK: HYDRAULIC TUBE CLAMP MTG, 0.205 IN. ID, 0.323 IN OD, 0.046 IN. THK (96906) MS122055	B	EA		8									D11	10
X20 00377	5310-050-2340	WASHER, LOCK: MASTER CYLINDER MTG (24617) 502340	A	EA		3									D12	10
0 00378	5310-010-3320	WASHER, LOCK: WHEEL CYLINDER MTG	A	EA		8	*	*	*	*	*	*	*	*	D7	7
0 00379	5310-741-2088	WASHER, REAR: WHEEL CYLINDER DISTRIBUTOR FITTING (63477) 7412088	B	EA		2									D11	4
00380		1208 - AIR BRAKE SYSTEM														
0 00381	4730-273-8561	ADAPTER, STRAIGHT, PIPE TO TUBE: AIR FILTER AND RELAY VALVE (00000) 504264	A	EA		6									D14	20
0 00382	4730-069-1186	ADAPTER, STRAIGHT, PIPE TO TUBE: AIR FILTER AND RELAY VALVE CONNECTING (96906) MS9179-5	B	EA		4									D15	15
P 0 00383	2530-797-9295	AIR FILTER, BRAKE LINE (00000) 7411022 (SAME AS AIR FILTER, STOCK NO. (40342) N12969 EXCEPT WHERE INDIVIDUAL COMPONENTS ARE ANNOTATED)	B	EA		2	*	*	*	*	*	*	5	5	D15	14

742-451 1652

(1) SMR CODE / INDEX NO	(2) FEDERAL STOCK NUMBER	(3) DESCRIPTION: REFERENCE NO & MFR CODE	USABLE ON CODE	UNIT OF ISSUE	QTY INC IN UNIT PACK	QTY INC IN UNIT	30-DAY DS MAINT ALLOWANCE (a) 1-20	(b) 21-50	(c) 51-100	30-DAY GS MAINT ALLOWANCE (a) 1-20	(b) 21-50	(c) 51-100	1-YR ALW PER 100 EQUIP CNTGCY	DEPOT MAINT ALW-PER 100 EQUIP	ILLUSTRATION (a) FIG NO	(b) ITEM NO
X20 00384	2530-797-9295	AIR FILTER, BRAKE LINE (40342) N12969	A	EA		2									D14	11
X20 00385	3655-792-3484	ADAPTER, BUSHING: AIR FILTER (40342) C129208	A	EA		2									D13	7
X20 00386	4730-580-8457	ADAPTER BUSHING: AIR FILTER (00000) 7979613	B	EA		2									D13	7
X1 00387	2530-860-0409	BODY, FILTER (40342) N12970A		EA		2									D13	2
P 0 00388	2530-741-1081	FILTER ELEMENT: AIR FILTER (40342) N12971		EA		2	2	4	8	2	4	8	100	100	D13	3
0 00389	4730-288-8571	PLUG, PIPE: CYLINDER AIR FILTER (40342) 7X102	A	EA		2									D13	8
X20 00390	4730-018-9566	PLUG, PIPE: CYLINDER AIR FILTER (00000) 117243	B	EA		2									D13	8
X20 00391	2530-706-9064	SPRING, HELICAL, COMPRESSION: AIR FILTER (40342) N12973		EA		2									D13	5
X20 00392	5310-026-0248	WASHER, AIR FILTER (40342) N12972		EA		2									D13	4
P 0 00393	5330-285-5123	WASHER, NONMETALLIC: AIR FILTER (40342) 4X509		EA		2	*	2	2	*	2	2	20	100	D13	6
0 00394	5306-225-9090	BOLT, MACHINE: AIR CHAMBER SUPPORT MTG (96906) MS35292-35	B	EA		1									D12	15
0 00395	5306-559-0473	BOLT, MACHINE: AIR CHAMBER TO SUPPORT MTG (96906) MS35292-34	B	EA		1									D12	1
0 00396	5306-225-9088	BOLT, MACHINE: INTERVEHICULAR HOSE HANGER BRACKET MTG (96906) MS35292-33	B	EA		4									D18	2
X20 00397	5306-797-9269	BOLT, U: AIR FILTER MTG (40342) N13021B		EA		2									D13	1
X20 00398	2530-574-8356	BRACKET: AIR CHAMBER MTG (06721) GN3550	A	EA		1									D12	9

C42-451 1652

(1) SMR CODE / INDEX NO	(2) FEDERAL STOCK NUMBER	(3) DESCRIPTION REFERENCE NO & MFR CODE	USABLE ON CODE	(4) UNIT OF ISSUE	(5) QTY INC IN UNIT PACK	(6) QTY INC IN UNIT	(7) 30-DAY DS MAINT ALLOWANCE (a) 1-20	(b) 21-50	(c) 51-100	(8) 30-DAY GS MAINT ALLOWANCE (a) 1-20	(b) 21-50	(c) 51-100	(9) 1-YR ALW PER 100 EQUIP CNTGCY	(10) DEPOT MAINT ALW-PER 100 EQUIP	(11) ILLUSTRATION (a) FIG NO	(b) ITEM NO
X20 00399		BRACKET: AIR CHAMBER MTG (40342) 8357982	B	EA		1									D12	9
X20 00400		BRACKET, HANGER: BRAKE INTERVEHICULAR HOSE (63477) AC2963	B	EA		2									D18	3
X20 00401	2530-106-4377	CHAMBER, AIR BRAKE (00000) 8357981		EA		1									D12	
X20 00402		BODY WITH STUD (40342) N20061		EA		1									D12	8
0 00403	5306-012-0213	BOLT, MACHINE: COVER TO BODY (40342) 3X11		EA		16									D12	29
X20 00404	2530-026-0200	COLLAR, STOP (00000) 8365427		EA		1									D12	25
X20 00405		COVER, BODY (40342) N10675		EA		1									D12	2
X1 00406	5340-026-0224	CUP, SPRING RETAINING (04342) N12978		EA		1									D12	6
P 0 00407	2530-323-8535	DIAPHRAGM: CHAMBER (40342) N2340		EA		1	*	*	*	*	*	*	5	100	D12	3
0 00408	5310-265-9214	NUT, PLAIN, HEXAGON: COVER TO BODY (40342) 2X34		EA		16									D12	26
P 0 00409	5330-599-7920	PACKING, PREFORMED: STOP TO ROD (40342) N11728N		EA		1	*	*	2	*	*	2	10	100	D12	5
X20 00410	2530-026-0228	ROD, PISTON (40342) N12975		EA		1									D12	4
P 0 00411	2530-200-7116	SPRING, HELICAL, COMPRESSION: DIAPHRAGM (40342) N12977		EA		1	*	*	*	*	*	*	3	5	D12	7
0 00412	5310-010-3320	WASHER, LOCK: COVER TO BODY		EA		16									D12	27
0 00413	5340-286-2494	CLAMP, LOOP: AIR LINE MTG (96906) MS2133-36	B	EA		2									D15	25

2 42-451 1652

(1) SMR CODE / INDEX NO	(2) FEDERAL STOCK NUMBER	(3) DESCRIPTION: REFERENCE NO & MFR CODE	USABLE ON CODE	(4) UNIT OF ISSUE	(5) QTY INC IN UNIT PACK	(6) QTY INC IN UNIT	(7) 30-DAY DS MAINT ALLOWANCE (a) 1-20	(b) 21-50	(c) 51-100	(8) 30-DAY GS MAINT ALLOWANCE (a) 1-20	(b) 21-50	(c) 51-100	(9) 1-YR ALW PER 100 EQUIP CNTGCY	(10) DEPOT MAINT ALW-PER 100 EQUIP	(11) ILLUSTRATION (a) FIG NO	(b) ITEM NO
0 00414	5340-269-2803	CLAMP, LOOP: RESERVOIR TO VALVE AIR LINE MTG (96906) MS21333-38	B	EA		1									D15	10
0 00415	5340-286-2594	CLAMP, LOOP: AIR TUBE TO FRAME (00000) 120523	A	EA		2									D14	3
X20 00416		CLAMP, RESERVOIR (06721) N13008A	A	EA		4									D14	16
X20 00417		CLAMP, RESERVOIR (40342) 7411080	B	EA		4									D15	3
0 00418	4820-142-2507	COCK, DRAIN: RESERVOIR DRAIN (00000) 103647	A	EA		1									D14	19
P 0 00419	4820-107-2998	COCK, DRAIN: RESERVOIR DRAIN (40342) CDAX1-103647	B	EA		1	*	2	2	*	2	2	15	12	D15	7
X20 00420	2530-720-5002	CONNECTOR, AIR BRAKE (00000) 7091800	A	EA		2									D14	
X20 00421		CONNECTOR, TERMINAL (43024) N1201D	A	EA		1									D14	23
0 00422	5310-266-4157	NUT, PLAIN, HEXAGON: CONNECTOR (40342) 2X207	A	EA		1									D14	26
0 00423	5310-012-1326	WASHER, LOCK: CONNECTOR (40342) 4X408	A	EA		1									D14	25
P 0 00424	2530-106-1746	CONNECTOR, AIR BRAKE (63477) 5228623	B	EA		2	*	2	2	*	2	2	20	15	D15	17
P 0 00425	4730-595-0083	COUPLING, AIR BRAKE: INTERVEHICULAR HOSE (96906) MS35746-1		EA		2	*	2	2	*	2	2	20	15	D15	20
X20 00426		COUPLING, PIPE: BRAKE CONNECTOR (06721) 19Z31	A	EA		2									D14	22
P 0 00427	2530-106-1747	COUPLING, PIPE: BRAKE CONNECTOR (63477) 144070	B	EA		2	*	2	2	*	2	2	15	12	D15	18
0 00428	4730-289-4914	ELBOW, TUBE: AIR LINE (00000) 504255	A	EA		4									D14	27

242-451 1652

(1) SMR CODE / INDEX NO	(2) FEDERAL STOCK NUMBER	(3) DESCRIPTION / REFERENCE NO & MFR CODE	USABLE ON CODE	(4) UNIT OF ISSUE	(5) QTY INC IN UNIT PACK	(6) QTY INC IN UNIT	(7) 30-DAY DS MAINT ALLOWANCE (a) 1-20	(b) 21-50	(c) 51-100	(8) 30-DAY GS MAINT ALLOWANCE (a) 1-20	(b) 21-50	(c) 51-100	(9) 1-YR ALW PER 100 EQUIP CNTGCY	(10) DEPOT MAINT ALW-PER 100 EQUIP	(11) ILLUSTRATION (a) FIG NO	(b) ITEM NO
0 00429	4730-069-1187	ELBOW, PIPE TO TUBE: AIR LINE (96906) MS39182-3	B	EA		5									D15	12
0 00430		ELBOW, PIPE TO TUBE: RESERVOIR TO VALVE TUBE MTG (96906) MS39182-6	B	EA		2									D15	6
X20 00431		ELBOW, TUBE: RELAY VALVE TO RESERVOIR TUBE (45681) 4-3403-1	A	EA		2									D14	8
X20 00433		HOSE AND COUPLING ASSEMBLY: AIR BRAKE, INTERVEHICULAR (06721) N13213E	A	EA		2									D14	13
M 0 00434	4720-106-1744	HOSE ASSEMBLY, AIR BRAKE: INTERVEHICULAR (56190) 600388-1 MANUFACTURE FROM:	B	EA		2									D15	19
X20 00434A		ADAPTER	B	EA		4										
P 0 00434B		HOSE, RUBBER	B	EA		2										
X20 00435	5310-655-9544	NUT, PLAIN, HEXAGON: AIR CHAMBER BRACKET AND AIR CHAMBER TO MASTER CYLINDER (24617) 174855	A	EA		3									D12	11
0 00436	5310-543-5653	NUT, PLAIN, HEXAGON: AIR CHAMBER BRACKET AND AIR CHAMBER TO MASTER CYLINDER (96906) MS35690-625	B	EA		6									D12	11
0 00437	5310-012-0368	NUT, PLAIN, HEXAGON: AIR CHAMBER SUPPORT TO FRAME (96906) MS35690-525	B	EA		1									D12	13
0 00438	5310-550-0777	NUT, PLAIN, HEXAGON: AIR FILTER MTG (96906) MS35690-402		EA		4									D13	10
0 00439	5310-012-0367	NUT, PLAIN, HEXAGON: AIR LINE CLAMP MTG (96906) MS35690-425	B	EA		2									D15	23
0 00440	5310-021-8436	NUT, PLAIN, HEXAGON: AIR TUBE CLIP MTG (40342) 2X38	A	EA		2									D14	1
0 00441	5310-012-0368	NUT, PLAIN, HEXAGON INTERVEHICULAR HOSE HANGER BRACKET MTG (96906) MS35690-525	B	EA		4									D18	5

242-451 1652

T 5 9 16-1

(1) SMR CODE / INDEX NO	(2) FEDERAL STOCK NUMBER	(3) DESCRIPTION — REFERENCE NO & MFR CODE	USABLE ON CODE	(4) UNIT OF ISSUE	(5) QTY INC IN UNIT PACK	(6) QTY INC IN UNIT	(7) 30-DAY DS MAINT ALLOWANCE (a) 1-20	(b) 21-50	(c) 51-100	(8) 30-DAY GS MAINT ALLOWANCE (a) 1-20	(b) 21-50	(c) 51-100	(9) 1-YR ALW PER 100 EQUIP CNTGCY	(10) DEPOT MAINT ALW-PER 100 EQUIP	(11) ILLUSTRATION (a) FIG NO	(b) ITEM NO
0 00442	5310-012-0369	NUT, PLAIN, HEXAGON: RESERVOIR AND RELAY VALVE MTG (00000) 120369	A	EA		12									D14	14
0 00443	5310-543-5653	NUT, PLAIN, HEXAGON: RESERVOIR AND RELAY VALVE MTG (96906) MS35690-625	B	EA		7									D15	1
0 00444	5310-950-0039	NUT, SELF-LOCKING, HEXAGON: RESERVOIR MTG (96906) MS20365-624	B	EA		2									D15	27
X20 00445	2530-741-1078	RESERVOIR, AIR (00000) 7411078	A	EA		1									D14	17
X20 00446	2530-741-1078	RESERVOIR, AIR (00000) 7411078	B	EA		1									D15	5
0 00447	5305-637-4046	SCREW, CAP, HEXAGON HEAD: AIR CHAMBER BRACKET MTG (96906) MS35292-60	B	EA		6									D12	28
0 00448	5305-018-1364	SCREW, CAP, HEXAGON HEAD: AIR CHAMBER BRACKET MTG (40342) 3X13	A	EA		3									D12	
0 00449	5305-012-3456	SCREW, CAP, HEXAGON HEAD: AIR LINE CLAMP MTG (96906) MS35292-7	B	EA		2									D15	26
X20 00450		SCREW, CAP, HEXAGON HEAD: RESERVOIR MTG (06721) 3X1228	A	EA		2									D14	18
0 00451	5305-269-2819	SCREW, CAP, HEXAGON HEAD: RESERVOIR MTG (96906) MS35292-75	B	EA		2									D15	4
X20 00452		SCREW, CAP, HEXAGON HEAD: RESERVOIR, RELAY VALVE MTG (06721) 3X1107	A	EA		10									D14	6
0 00453	5305-269-2805	SCREW, CAP, HEXAGON HEAD: RESERVOIR RELAY VALVE MTG (96906) MS35292-62	B	EA		7									D15	8
0 00454	5305-011-3957	SCREW, MACHINE: AIR TUBE CLIP MTG (40342) 3X401	A	EA		2									D14	4
X20 00455		SUPPORT: AIR CHAMBER (56190) 301216-1	B	EA		1									D12	12

242-451 1652

(1) SMR CODE / INDEX NO	(2) FEDERAL STOCK NUMBER	(3) DESCRIPTION — REFERENCE NO & MFR CODE	USABLE ON CODE	(4) UNIT OF ISSUE	(5) QTY INC IN UNIT PACK	(6) QTY INC IN UNIT	(7) 30-DAY DS MAINT ALLOWANCE (a) 1-20	(b) 21-50	(c) 51-100	(8) 30-DAY GS MAINT ALLOWANCE (a) 1-20	(b) 21-50	(c) 51-100	(9) 1-YR ALW PER 100 EQUIP CNTGCY	(10) DEPOT MAINT ALW-PER 100 EQUIP	(11) ILLUSTRATION (a) FIG NO	(b) ITEM NO
MFO 00456		TUBE, AIR: RELAY VALVE TO RESERVOIR (36593) D323 MANUFACTURE FROM:	A	EA		1									D14	7
P F 00456A	4710-277-5529	TUBE, COPPER (20 IN. REQUIRED)		FT			SEE GRP 9501									
MFO 00457		TUBE, AIR: RESERVOIR TO RELAY VALVE (56190) 301238-1 MANUFACTURE FROM:	B	EA		1									D15	9
P F 00457A	4710-277-5529	TUBE, COPPER (30 IN. REQUIRED)		FT			SEE GRP 9501									
MFO 00458		TUBE, AIR: AIR FILTER TO RELAY VALVE, EMERGENCY SIDE (56190) 301240-1 MANUFACTURE FROM:	B	EA		1									D15	13
P F 00458A	4710-277-5529	TUBE, COPPER (16 IN. REQUIRED)		FT			SEE GRP 9501									
MFO 00459		TUBE, AIR: RELAY VALVE TO AIR BRAKE CHAMBER (56190) 301239-1 MANUFACTURE FROM:	B	EA		1									D15	16
P F 00459A	4710-277-5529	TUBE, COPPER (16 IN. REQUIRED)		FT			SEE GRP 9501									
MFO 00460		TUBE, AIR: AIR FILTER TO COUPLING (56190) 301241-1 MANUFACTURE FROM:	B	EA		2									D15	21
P F 00460A	4710-277-5529	TUBE, COPPER (23 IN. REQUIRED)		FT			SEE GRP 9501									
MFO 00461		TUBE, AIR: AIR FILTER TO RELAY VALVE, SERVICE SIDE (56190) 500573-1 MANUFACTURE FROM:	B	EA		1									D15	22
P F 00461A	4710-277-5529	TUBE, COPPER (5 FT 3 IN. REQUIRED)		FT			SEE GRP 9501									
MFO 00462		TUBE ASSEMBLY, EMERGENCY LINE: FILTER TO RELAY VALVE MANUFACTURE FROM:	A	EA		1									D14	10

(1) SMR CODE / INDEX NO	(2) FEDERAL STOCK NUMBER	(3) DESCRIPTION — REFERENCE NO & MFR CODE	USABLE ON CODE	(4) UNIT OF ISSUE	(5) QTY INC IN UNIT PACK	(6) QTY INC IN UNIT	(7) 30-DAY DS MAINT ALLOWANCE (a) 1-20	(b) 21-50	(c) 51-100	(8) 30-DAY GS MAINT ALLOWANCE (a) 1-20	(b) 21-50	(c) 51-100	(9) 1-YR ALW PER 100 EQUIP CNTGCY	(10) DEPOT MAINT ALW-PER 100 EQUIP	(11) ILLUSTRATION (a) FIG NO	(b) ITEM NO
P F 00462A	4710-047-4402	TUBE, COPPER (28 IN. REQUIRED)		FT			SEE GRP 9501									
MFO 00463		TUBE ASSEMBLY: RELAY VALVE TO AIR CHAMBER MANUFACTURE FROM:	A	EA		1									D14	21
P F 00463A	4710-047-4402	TUBE, COPPER (11 IN. REQUIRED)		FT			SEE GRP 9501									
MFO 00464		TUBE ASSEMBLY, SERVICE LINE: FILTER TO RELAY VALVE MANUFACTURE FROM:	A	EA		1									D14	5
P F 00464A	4710-047-4402	TUBE, COPPER (5 FT REQUIRED)		FT			SEE GRP 9501									
MFO 00465		TUBE, COPPER: FILTER TO HOSE MANUFACTURE FROM:	A	EA		2									D14	12
P F 00465A	4710-047-4402	TUBE, COPPER (20 IN. REQUIRED FOR EACH TUBE)		FT			SEE GRP 9501									
P O 00466	4930-066-2508	VALVE, RELAY, EMERGENCY (40342) N3714Z	A	EA		1	*	*	*	*	*	*	2	5	D14	9
P O 00467	2530-864-0150	VALVE, RELAY, EMERGENCY (96906 MS53004-1)	B	EA		1	*	*	2	*	*	2	10	8	D15	11
O 00468		WASHER, FLAT: RESERVOIR MTG (96906) AN960-616	B	EA		4									D15	28
X20 00469	5310-050-2340	WASHER, LOCK: AIR CHAMBER BRACKET AND AIR CHAMBER TO MASTER CYLINDER MTG (24617) 502340	A	EA		6									D12	10
O 00470	5310-999-7643	WASHER, LOCK: AIR CHAMBER BRACKET AND AIR CHAMBER TO MASTER CYLINDER MTG (96906) MS122034	B	EA		6									D12	10
O 00471	5310-818-3044	WASHER, LOCK: AIR CHAMBER SUPPORT TO FRAME MTG (96906) MS122058	B	EA		1									D12	14
O 00472	5310-812-3373	WASHER, LOCK: AIR FILTER MTG (96906) MS122057		EA		4									D13	9

(1) SMR CODE / INDEX NO	(2) FEDERAL STOCK NUMBER	(3) DESCRIPTION / REFERENCE NO & MFR CODE	USABLE ON CODE	(4) UNIT OF ISSUE	(5) QTY INC IN UNIT PACK	(6) QTY INC IN UNIT	(7) 30-DAY DS MAINT ALLOWANCE (a) 1-20	(b) 21-50	(c) 51-100	(8) 30-DAY GS MAINT ALLOWANCE (a) 1-20	(b) 21-50	(c) 51-100	(9) 1-YR ALW PER 100 EQUIP CNTGCY	(10) DEPOT MAINT ALW-PER 100 EQUIP	(11) ILLUSTRATION (a) FIG NO	(b) ITEM NO
0 00473	5310-812-3373	WASHER, LOCK: AIR LINE CLAMP MTG (96906) MS122057	B	EA		2									D15	24
X20 00474	5310-012-0380	WASHER, LOCK: AIR TUBE CLIP MTG (06721) 4X11	A	EA		2									D14	2
0 00475	5310-818-3044	WASHER, LOCK: INTERVEHICULAR HOSE HANGER BRACKET MTG (96906) MS122058	B	EA		4									D18	4
X20 00476	5310-261-7340	WASHER, LOCK: RESERVOIR AND RELAY	A	EA		12									D14	15
0 00477	5310-999-7643	WASHER, LOCK: RESERVOIR AND RELAY (96906) MS122034	B	EA		7									D15	2
00478		GROUP 13 - WHEELS														
00479		1311 - WHEEL ASSEMBLY														
P F 00480	2530-106-0994	BRAKE ASSEMBLY, LEFT HAND (56190) 500744-1 (SAME AS BRAKE ASSEMBLY, STOCK NO. (56190) 500744-2, EXCEPT WHERE INDIVIDUAL COMPONENTS ARE ANNOTATED)	B	EA		1	*	*	*	*	*	*	5	5	D16	
P F 00481		BRAKE ASSEMBLY, RIGHT HAND (56190) 500744-2	B	EA		1	*	*	*	*	*	*	5	5	D16	
P O 00482	2530-741-3231	BACK, FRONT BRAKE DRUM (09386) 706320	B	EA		2	*	*	*	*	*	*	5	5	D16	1
P O 00483	3110-100-5951	BEARING, ROLLER, TAPERED: INCLUDES CUP (96906) MS19081-112	B	EA		4	2	2	3	2	2	3	30	25	D16	3 4
P O 00484	5306-335-4768	BOLT, RIBBED NECK DRUM MTG (09386) 706276	B	EA		36	2	2	3	2	2	3	30	25	D16	20
P O 00485	5306-206-1560	BOLT, RIBBED SHOULDER: DRUM BACK MTG (19386) 704476	B	EA		12	2	2	3	2	2	3	30	25	D16	2
P F 00486	2530-730-7620	BRAKE ASSEMBLY, LEFT HAND: INTERNAL (00000) 833670		EA		1	SEE GRP 1202									
P F 00487	2530-730-7621	BRAKE ASSEMBLY, RIGHT HAND: INTERNAL (00000) 8336702		EA		1	SEE GRP 1202									

242-451 16522

(1) SMR CODE / INDEX NO	(2) FEDERAL STOCK NUMBER	(3) DESCRIPTION / REFERENCE NO & MFR CODE	USABLE ON CODE	(4) UNIT OF ISSUE	(5) QTY INC IN UNIT PACK	(6) QTY INC IN UNIT	(7) 30-DAY DS MAINT ALLOWANCE (a) 1-20	(b) 21-50	(c) 51-100	(8) 30-DAY GS MAINT ALLOWANCE (a) 1-20	(b) 21-50	(c) 51-100	(9) 1-YR ALW PER 100 EQUIP CNTGCY	(10) DEPOT MAINT ALW-PER 100 EQUIP	(11) ILLUS-TRATION (a) FIG NO	(b) ITEM NO
P 0 00488	1015-614-4454	CAP, HUB (00000) 6144454	B	EA		2	*	*	*	*	*	*	5	5	D16	17
P 0 00489	2530-741-1425	DRUM, BRAKE (00000) 7411425	B	EA		2	*	*	2	*	*	2	10	8	D16	8
P 0 00490	2530-614-4356	GASKET: HUB CAP (00000) 6144356	B	EA		2	*	2	2	*	2	2	20	15	D16	16
P 0 00491	1440-677-0202	HUB, WHEEL (00000) 8719915	B	EA		2	*	*	*	*	*	*	5	5	D16	12
0 00492	5310-732-0559	NUT, PLAIN, HEXAGON: BRAKE BACKPLATE TO AXLE MTG (96906) MS51968-8	B	EA		24	SEE GRP 1202									
P 0 00493	5310-741-1379	NUT, PLAIN, HEXAGON: WHEEL BEARING ADJUSTING (24617) 2275727	B	EA		4	*	2	2	*	2	2	20	15	D16	14
P 0 00494	5310-982-4908	NUT, SELF-LOCKING, HEXAGON: DRUM MTG (09386) 67428E2	B	EA		36	2	2	3	2	2	3	30	25	D16	10
0 00495	5310-594-8038	NUT, SINGLE BALL SEAT: WHEEL MTG, LEFT HAND (00000) 537801 (USED ON BRAKE ASSEMBLY, STOCK NO. (56190) 500744-1, ONLY)	B	EA		6									D16	13
P 0 00496	5310-841-5411	NUT, SINGLE BALL SEAT: WHEEL MTG, RIGHT HAND (00000) 537802 (USED ON BRAKE ASSEMBLY, STOCK NO. (56190) 500744-2, ONLY)	B	EA		6	*	2	2	*	2	2	20	15	D16	13
0 00497	5310-813-0408	NUT, SLOTTED, HEXAGON: DRUM BACK MTG (96906) MS35692-1225	B	EA		12									D16	7
0 00498		SCREW, CAP, HEXAGON HEAD: BRAKE BACKPLATE TO AXLE MTG (96906) MS90726-64	B	EA		16	SEE GRP 1202									
0 00499	5305-269-2803	SCREW, CAP, HEXAGON HEAD: SUPPORT MTG (96906) MS90726-60	B	EA		8	SEE GRP 1202									
0 00500		SCREW, MACHINE: HUB CAP MTG (96906) MS35227-79	B	EA		6									D16	19

2,2,2-451 1652

(1) SMR CODE / INDEX NO	(2) FEDERAL STOCK NUMBER	(3) DESCRIPTION / REFERENCE NO & MFR CODE	USABLE ON CODE	(4) UNIT OF ISSUE	(5) QTY INC IN UNIT PACK	(6) QTY INC IN UNIT	(7) 30-DAY DS MAINT ALLOWANCE (a) 1-20	(b) 21-50	(c) 51-100	(8) 30-DAY GS MAINT ALLOWANCE (a) 1-20	(b) 21-50	(c) 51-100	(9) 1-YR ALW PER 100 EQUIP CNTGCY	(10) DEPOT MAINT ALW-PER 100 EQUIP	(11) ILLUSTRATION (a) FIG NO	(b) ITEM NO
P 0 00501	5330-741-1429	SEAL, PLAIN, ENCASED: WHEEL ASSEMBLY (24617) 2275398	B	EA		2	2	2	3	2	2	3	30	25	D16	5
X1 00502	2530-741-1433	SPACER, SLEEVE: WHEEL ASSEMBLY (24617) 2275698		EA		2									D16	6
0 00503		STUD, WHEEL, LEFT HAND (96906) S51946-1	B	EA		6									D16	11
0 00504		STUD, WHEEL, RIGHT HAND (96906) MS51946-2 (USED ON BRAKE ASSEMBLY, STOCK NO. (56190) 500744-2, ONLY)	B	EA		6									D16	11
0 00505	5310-582-5977	WASHER, FLAT: DRUM MTG (96906) MS27133-14	B	EA		36									D16	9
P 0 00506	5310-741-1378	WASHER, KEY: BEARING ADJUSTING (00000) 7411378	B	EA		2	*	*	*	*	*	*	5	5	D16	15
0 00507	5310-627-6128	WASHER, LOCK: BRAKE BACKPLATE TO AXLE MTG (96906) MS35335-35	B	EA		24	SEE GRP 1202									
0 00508	5310-274-8714	WASHER, LOCK: HUB CAP MTG (96906) MS35337-63	B	EA		6									D16	18
X20 00509	1015-614-4454	CAP, HUB (00000) 6144454	A	EA		2									D16	17
M 0 00510	2530-614-4356	GASKET: HUB CAP (09386) 70271E MANUFACTURE FROM:	A	EA		2									D16	16
P 0 00510A	5330-233-5846	PAPER, GASKET (6 IN. x 6 IN. REQUIRED FOR EACH)		EA			SEE GRP 9501									
X20 00511		HUB AND DRUM ASSEMBLY (09386) 82556 (SAME AS HUB AND DRUM ASSEMBLY, STOCK NO. (09386) 82555 EXCEPT WHERE INDIVIDUAL COMPONENTS ARE ANNOTATED)	A	EA		1									D16	
X20 00512		HUB AND DRUM ASSEMBLY: RIGHT HAND (09386) 82555	A	EA		1									D16	

242-451 1652

(1) SMR CODE / INDEX NO	(2) FEDERAL STOCK NUMBER	(3) DESCRIPTION / REFERENCE NO & MFR CODE	USABLE ON CODE	(4) UNIT OF ISSUE	(5) QTY INC IN UNIT PACK	(6) QTY INC IN UNIT	(7) 30-DAY DS MAINT ALLOWANCE (a) 1-20	(b) 21-50	(c) 51-100	(8) 30-DAY GS MAINT ALLOWANCE (a) 1-20	(b) 21-50	(c) 51-100	(9) 1-YR ALW PER 100 EQUIP CNTGCY	(10) DEPOT MAINT ALW-PER 100 EQUIP	(11) ILLUSTRATION (a) FIG NO	(b) ITEM NO
X20 00513	2530-741-3231	BACK, FRONT BRAKE DRUM (00000) 7413231 (USED ON HUB AND DRUM ASSEMBLY, STOCK NO. (09386) 82555, ONLY)	A	EA		1									D16	1
X20 00514	2530-322-7257	BACK, FRONT BRAKE DRUM (00000) 8719914 (USED ON HUB AND DRUM ASSEMBLY, STOCK NO. (09386) 82556, ONLY)	A	EA		1									D16	1
X20 00515	5306-206-1560	BOLT, RIBBED SHOULDER: DRUM BACK MTG (09386) 70447E	A	EA		6									D16	2
X20 00516		BOLT, RIBBED, SHOULDER: DRUM MTG (00000) 8720025	A	EA		6									D16	20
P O 00517	5306-733-9239	BOLT, RIBBED, SHOULDER: WHEEL LEFT HAND (00000) 7339239 (USED ON HUB AND DRUM ASSEMBLY, STOCK NO. (09386) 82556, ONLY)	A	EA		6	*	*	*	*	*	*	5	30	D16	11
P O 00518	3110-143-7538	CONE, BEARING: WHEEL (36593) 071116	A	EA		2	*	*	*	*	*	*	4	20	D16	4
P O 00519	3110-143-7586	CUP, TAPERED, ROLLER BEARING: WHEEL (00000) 712869	A	EA		2	*	*	*	*	*	*	4	20	D16	3
X20 00520		DRUM, BRAKE (00000) 8719913 (USED ON HUB AND DRUM ASSEMBLY, STOCK NO. (09386) 82556, ONLY)	A	EA		1									D16	8
X20 00521	2530-741-1425	DRUM, BRAKE (00000) 7411425 (USED ON HUB AND DRUM ASSEMBLY, STOCK NO. (09386) 82556, ONLY)	A	EA		1									D16	8
X20 00522	4130-286-9977	HUB, WHEEL (09386) 82236	A	EA		1									D16	12
X20 00523	5310-982-4908	NUT, JAM: DRUM BACK MTG (00000) A172086	A	EA		6									D16	7

(1) SMR CODE / INDEX NO	(2) FEDERAL STOCK NUMBER	(3) DESCRIPTION / REFERENCE NO & MFR CODE	USABLE ON CODE	(4) UNIT OF ISSUE	(5) QTY INC IN UNIT PACK	(6) QTY INC IN UNIT	(7) 30-DAY DS MAINT ALLOWANCE (a) 1-20	(b) 21-50	(c) 51-100	(8) 30-DAY GS MAINT ALLOWANCE (a) 1-20	(b) 21-50	(c) 51-100	(9) 1-YR ALW PER 100 EQUIP CNTGCY	(10) DEPOT MAINT ALW-PER 100 EQUIP	(11) ILLUS-TRATION (a) FIG NO	(b) ITEM NO
0 00524	5310-655-9599	NUT, LOCK: DRUM MTG (00000) 8720024	A	EA		18									D16	10
0 00525	5310-741-1379	NUT, PLAIN, HEXAGON: WHEEL BEARING (00000) 7411379	A	EA		2									D16	14
P 0 00526	5330-741-1429	SEAL, PLAIN, ENCASED: WHEEL ASSEMBLY (00000) 7411429	A	EA		2	2	2	3	2	2	3	40	200	D16	5
P 0 00527	5307-383-5959	STUD, WHEEL, RIGHT HAND (00000) 7339238 (USED ON HUB AND DRUM ASSEMBLY, STOCK NO. (09386) 82555, ONLY)	A	EA		6	*	*	2	*	*	2	10	30	D16	11
0 00528	5310-582-5977	WASHER, FLAT: DRUM MTG (00000) 120394	A	EA		18									D16	9
0 00529	5310-017-1378	WASHER, KEY: BEARING ADJUSTING (00000) 7411378	A	EA		1									D16	15
P 0 00530	5310-273-7771	NUT, SINGLE BALL SEAT, HEXAGON: WHEEL MTG, LEFT HAND (09386) 37889	A	EA		6	*	*	2	*	*	2	10	30	D16	13
P 0 00531	5310-273-7770	NUT, SINGLE BALL SEAT, HEXAGON· WHEEL MTG, RIGHT HAND (09386) 37888	A	EA		6	*		2	*	*	2	10	30	D16	13
0 00532	5305-012-4060	SCREW, MACHINE: HUB CAP (09386) 0922E4	A	EA		3									D16	19
0 00533	5310-011-5109	WASHER, LOCK: HUB CAP (71300) 70036E6	A	EA		3									D16	18
X20 00534	2530-026-0265	WHEEL, PNEUMATIC TIRE (00000) 7389621	A	EA		2										
X20 00535	2530-111-9994	WHEEL,.PNEUMATIC TIRE (96906) MS53044-5	B	EA		2										
00536		1313 - TIRES, TUBES														
0 00537	2640-505-6176	CAP, TIRE VALVE (53477) L300		EA		2										

242-451 1652

T 5- 0-16-1

(1) SMR CODE / INDEX NO	(2) FEDERAL STOCK NUMBER	(3) DESCRIPTION / REFERENCE NO & MFR CODE	USABLE ON CODE	(4) UNIT OF ISSUE	(5) QTY INC IN UNIT PACK	(6) QTY INC IN UNIT	(7) 30-DAY DS MAINT ALLOWANCE (a) 1-20	(b) 21-50	(c) 51-100	(8) 30-DAY GS MAINT ALLOWANCE (a) 1-20	(b) 21-50	(c) 51-100	(9) 1-YR ALW PER 100 EQUIP CNTGCY	(10) DEPOT MAINT ALW-PER 100 EQUIP	(11) ILLUSTRATION (a) FIG NO.	(b) ITEM NO
X20 00552	5310-696-5092	NUT, SLOTTED, HEXAGON: LUNETTE, 1 1/2-12 THD SIZE (96906) MS35692-2422	B	EA		1									D19	2
0 00553	5315-187-1824	PIN, COTTER: LUNETTE	B	EA		1									D19	1
X20 00554	5315-843-0138	PIN, COTTER: LUNETTE, 7/32 IN. DIA, 2 1/4 IN. LG (96906) MS24665-566	B	EA		1									D19	1
X20 00555		WASHER, FLAT: LUNETTE (96906) MS1595-228	A	EA		1									D19	3
P 0 00556	5310-143-6169	WASHER, FLAT: LUNETTE MTG, 1 5/8 IN. ID, 2 11/16 IN. OD, 1/4 IN. THK (56190) 102214	B	EA		1	*	*	*	*	*	*	5	5	D19	3
00557		1507 - LEVELING JACK														
X20 00558		NUT, PLAIN, HEXAGON: SUPPORT ASSEMBLY MTG, JAM, 3/4-16 THD SIZE (96906) MS35691-1225	B	EA		1									D20	18
X20 00559		NUT, SELF-LOCKING, HEXAGON: SUPPORT ASSEMBLY MTG, THIN, 3/4-16 THD SIZE (96906) MS20364-1216	B	EA		1									D20	18
X20 00560		SUPPORT ASSEMBLY, RETRACTABLE: TRAILER (52793) E10668	A	EA		1									D20	
X20 00561		ARM, ASSEMBLY: CRANK (52793) B10747	A	EA		1									D20	32
X20 00562		AXLE, LEVELING JACK (52793) A10744	A	EA		1									D20	27
X20 00563		BEARING, ROLLER: GEAR SCREW (52793) 0-2475	A	EA		1									D20	10
0 00564	5306-010-0121	BOLT, MACHINE: CRANK ARM	A	EA		1									D20	1
X20 00565	5306-010-0121	BOLT, MACHINE: LEG TO TUBE	A	EA		4									D20	24

247-451 1652

(1) SMR CODE / INDEX NO	(2) FEDERAL STOCK NUMBER	(3) DESCRIPTION / REFERENCE NO & MFR CODE	USABLE ON CODE	(4) UNIT OF ISSUE	(5) QTY INC IN UNIT PACK	(6) QTY INC IN UNIT	(7) 30-DAY DS MAINT ALLOWANCE (a) 1-20	(b) 21-50	(c) 51-100	(8) 30-DAY GS MAINT ALLOWANCE (a) 1-20	(b) 21-50	(c) 51-100	(9) 1-YR ALW PER 100 EQUIP CNTGCY	(10) DEPOT MAINT ALW-PER 100 EQUIP	(11) ILLUSTRATION (a) FIG NO	(b) ITEM NO
P 0 00538	2610-269-7383	INNER TUBE, PNEUMATIC TIRE: 900-20 (96906) MS35393-13		EA		2	*	2	2	*	2	2	20	15		
P 0 00539	2610-262-8677	TIRE, PNEUMATIC: 900-20 8 PLY (96906) MS35388-16		EA		2	*	2	2	*	2	2	20	15		
0 00540	2504-055-1229	VALVE, CORE (53477) 6100E		EA		2										
00541		GROUP 15 - FRAME, TOWING ATTACHMENTS														
00542		1501 - FRAME ASSEMBLY														
X20 00543		BRACKET, GREASE GUN: INTERVEHICULAR CABLE MTG, WELDED TO TRAILER TONGUE (56190) GGB	B	EA		1									D18	9
X 00544		FRAME ASSEMBLY, TRAILER (36593) 0751022	A	EA		1									D17	1
X2H 00545		FRAME ASSEMBLY, TRAILER (56190) 800050-1	B	EA		1									D18	6
X20 00546		RETAINER: INTERVEHICULAR CABLE MTG, WELDED TO TRAILER TONGUE (56190) 102218	B	EA		1									D18	8
P 0 00547		RING ASSEMBLY, TIE DOWN (05861) 4887796	B	EA		4	*	2	2	*	2	2	20	15	D18	7
00548		1503 - TOWING ATTACHMENTS														
X20 00549		LUNETTE, TOWING (36593) 0711007	A	EA		1									D19	4
P 0 00550	2640-995-3145	LUNETTE, TOWING (96906) MS51339-1	B	EA		1	*	*	*	*	*	*	5	5	D19	4
X20 00551		NUT, PLAIN, HEXAGON: LUNETTE 1 1/8-16 THD SIZE (00000) 7411028	A	EA		1									D19	2

(1) SMR CODE / INDEX NO	(2) FEDERAL STOCK NUMBER	(3) DESCRIPTION / REFERENCE NO & MFR CODE	USABLE ON CODE	(4) UNIT OF ISSUE	(5) QTY INC IN UNIT PACK	(6) QTY INC IN UNIT	(7) 30-DAY DS MAINT ALLOWANCE (a) 1-20	(b) 21-50	(c) 51-100	(8) 30-DAY GS MAINT ALLOWANCE (a) 1-20	(b) 21-50	(c) 51-100	(9) 1-YR ALW PER 100 EQUIP CNTGCY	(10) DEPOT MAINT ALW-PER 100 EQUIP	(11) ILLUSTRATION (a) FIG NO.	(b) ITEM NO
0 00581	5315-536-3865	PIN, STRAIGHT, HEADLESS: HANDLE SPRING WHEEL AND CRANK HANDLE	A	EA		5									D20	4
0 00582	5305-012-1887	SCREW, CAP, HEXAGON HEAD: CAP LOCK	A	EA		1									D20	35
0 00583	5305-013-8258	SCREW, CAP, HEXAGON HEAD: CRANK HANDLE TO ARM	A	EA		1									D20	30
X20 00584		SCREWSHAFT, LEVELING (52793) B9839-7	A	EA		1									D20	29
0 00585	5340-331-2340	SPACER, RING: BEVEL GEAR (00000) 8020716	A	EA		1									D20	6
X20 00586		SPACER, SCREW: BEVEL GEAR (52793) A9829	A	EA		1									D20	13
X20 00587	2530-699-8489	SPRING, HELICAL, COMPRESSION: LANDING GEAR HANDLE (00000) 8331541	A	EA		2									D20	21
X20 00588		TUBE ASSEMBLY, INNER (52793) D10733	A	EA		1									D20	25
X20 00589		TUBE ASSEMBLY, OUTER (52793) D10732	A	EA		1									D20	5
0 00590	5310-773-1354	WASHER, FLAT: HANDLE ARM	A	EA		1									D20	3
0 00591	5310-693-0738	WASHER, HANDLE (00000) 8331542	A	EA		2									D20	20
0 00592	5310-012-0214	WASHER, LOCK: ARM MTG	A	EA		1									D20	2
0 00593	5310-010-0578	WASHER, LOCK: CAP LOCK	A	EA		1									D20	34
0 00594	5310-270-8832	WASHER, PLAIN: SPINDLE MTG (00000) 8330821	A	EA		1									D20	17
X20 00595	5310-270-8834	WASHER, THRUST: SPINDLE MTG (00000) 8330813	A	EA		1									D20	16

(1) SMR CODE / INDEX NO	(2) FEDERAL STOCK NUMBER	(3) DESCRIPTION REFERENCE NO & MFR CODE	USABLE ON CODE	(4) UNIT OF ISSUE	(5) QTY INC IN UNIT PACK	(6) QTY INC IN UNIT	(7) 30-DAY DS MAINT ALLOWANCE (a) 1-20	(b) 21-50	(c) 51-100	(8) 30-DAY GS MAINT ALLOWANCE (a) 1-20	(b) 21-50	(c) 51-100	(9) 1-YR ALW PER 100 EQUIP CNTGCY	(10) DEPOT MAINT ALW-PER 100 EQUIP	(11) ILLUSTRATION (a) FIG NO	(b) ITEM NO
0 00566	5306-174-4246	BOLT, PIVOT: TO SWIVEL SPINDLE (00000) 7979972	A	EA		1									D20	19
X20 00567	2530-693-0736	BRACKET, SWIVEL, WITH SPINDLE (00000) 8331539	A	EA		1									D20	15
X20 00568		CAP, HEAD (52793) B7545-6	A	EA		1									D20	9
X20 00569	4730-050-4308	FITTING, LUBRICATION: LANDING GEAR (52793) 16108	A	EA		2									D20	8
X20 00570		FRAME ASSEMBLY: LEG, SUPPORT ASSEMBLY (52793) C10729	A	EA		1									D20	22
X20 00571		GEAR, BEVEL: GEAR SCREW (52793) A8930	A	EA		1									D20	12
X20 00572		GEAR, BEVEL: HANDLE (52793) A9831-1A	A	EA		1									D20	7
X20 00573		HANDLE, ASSEMBLY: CRANK ARM (52793) A10421	A	EA		1									D20	31
X20 00574	2590-670-1997	HANDLE: SUPPORT ASSEMBLY (00000) 7979974	A	EA		1									D20	23
X20 00575	5310-011-4494	NUT, PLAIN, HEXAGON: HANDLE TO ARM	A	EA		1									D20	33
X20 00576		NUT, PLAIN, HEXAGON: SPINDLE MTG (00000) 272686	A	EA		1									D20	18
X20 00577	5310-050-3334	NUT, SELF-LOCKING, HEXAGON: LEG TO TUBE, 5/16-18 THD SIZE	A	EA		4									D20	36
0 00578	5310-045-1023	NUT, SELF-LOCKING, HEXAGON: PIVOT BOLT (00000) 451023	A	EA		1									D20	14
0 00579	5315-014-2533	PIN, GROOVED: BEVEL GEAR	A	EA		1									D20	11
0 00580	5315-044-3039	PIN, GROOVED: JACK SCREW	A	EA		1									D20	28

c 47-451 1652

CODE / INDEX NO	FEDERAL STOCK NUMBER	DESCRIPTION / REFERENCE NO & MFR CODE	USABLE ON CODE	UNIT OF ISS	INC IN UNIT PACK	QTY INC IN UNIT	ALLOWANCE (a) 1-20	ALLOWANCE (b) 21-50	ALLOWANCE (c) 51-100	ALLOWANCE (a) 1-20	ALLOWANCE (b) 21-50	ALLOWANCE (c) 51-100	ALW PER 100 EQUIP CNTGCY	MAINT ALW-PER 100 EQUIP	FIG OR (a) FIG NO	FIG OR (b) ITEM NO
X20 00596		WHEEL: LANDING GEAR (52793) B10746	A	EA		2									D20	26
P 0 00597		SUPPORT ASSEMBLY, RETRACTABLE: TRAILER (00000) 7032127	B	EA		1	*	*	*	*	*	*	5	5	D20	
P 0 00598		ARM ASSEMBLY: CRANK (00000) 7032135	B	EA		1	*	*	*	*	*	*	5	5	D20	32
0 00599	5306-225-8497	BOLT, MACHINE: CRANK ARM ASSEMBLY MTG (00000) MS35291-32	B	EA		1									D20	1
0 00600		BOLT, MACHINE: OUTER TUBE TO INNER TUBE MTG (96906) MS35202-111	B	EA		4									D20	24
P 0 00601	5306-174-4246	BOLT, SHOULDER: SWIVEL BRACKET TO FRAME (00000) 7979972	B	EA		1	*	*	2	*	*	2	10	8	D20	19
X20 00602	2530-693-0736	BRACKET, SWIVEL, WITH SPINDLE (00000) 8331539	B	EA		1									D20	15
X20 00603		FRAME ASSEMBLY: LEG, SUPPORT ASSEMBLY (00000) 7032128	B	EA		1									D20	22
P 0 00604	2590-670-1997	HANDLE: SUPPORT ASSEMBLY (00000) 7979974	B	EA		1	*	*	*	*	*	*	5	5	D20	23
P 0 00605	2590-937-5286	HANDLE ASSEMBLY: CRANK ARM (00000) 7032136	B	EA		1	*	*	2	*	*	2	10	8	D20	31
0 00606	5310-982-4908	NUT, SELF-LOCKING, HEXAGON: HANDLE MTG (96906) MS51922-21	B	EA		1									D20	33
0 00607	5310-067-9507	NUT, SELF-LOCKING, HEXAGON: OUTER TUBE TO INNER TUBE MTG (96906) MS51922-37	B	EA		4									D20	36
P 0 00608	5310-045-1023	NUT, SELF-LOCKING, HEXAGON: SWIVEL BRACKET TO FRAME BOLT MTG (00000) 451023	B	EA		1	*	*	2	*	*	2	10	8	D20	14
P 0 00609	5315-536-3865	PIN, STRAIGHT, HEADLESS: HANDLE MTG (00000) 7979971	B	EA		1	*	*	*	*	*	*	5	5	D20	4

242-451 1652

(1) SMR CODE / INDEX NO	(2) FEDERAL STOCK NUMBER	(3) DESCRIPTION / REFERENCE NO & MFR CODE	USABLE ON CODE	(4) UNIT OF ISSUE	(5) QTY INC IN UNIT PACK	(6) QTY INC IN UNIT	(7) 30-DAY DS MAINT ALLOWANCE (a) 1-20	(b) 21-50	(c) 51-100	(8) 30-DAY GS MAINT ALLOWANCE (a) 1-20	(b) 21-50	(c) 51-100	(9) 1-YR ALW PER 100 EQUIP CNTGCY	(10) DEPOT MAINT ALW-PER 100 EQUIP	(11) ILLUSTRATION (a) FIG NO	(b) ITEM NO
0 00610	5305-269-2807	SCREW, CAP, HEXAGON HEAD: HANDLE MTG (96906) MS35298-64	B	EA		1									D20	30
X20 00611	2530-699-8489	SPRING, HELICAL, COMPRESSION: HANDLE (00000) 833154	B	EA		1									D20	21
X20 00612		SUPPORT ASSEMBLY: TRAILER (00000) 7032188	B	EA		1									D20	
P 0 00613	2590-679-3675	AXLE, LEVELING JACK (00000) 7032156	B	EA		1	*	*	2	*	*	2	10	8	D20	27
X20 00614	2590-341-2388	CAP, GEAR HOUSING (00000) 7032131	B	EA		1									D20	9
P 0 00615	3110-100-3682	CONE AND ROLLERS, TAPERED ROLLER BEARING (00000) 705324	B	EA		1	*	*	2	*	*	2	10	8	D20	
P 0 00616	3110-100-0633	CUP, TAPERED ROLLER BEARING: SCREWSHAFT (00000) 707070	B	EA		1	*	*	2	*	*	2	10	8	D20	
0 00617	4730-050-4208	FITTING, LUBRICATION: SUPPORT ASSEMBLY, STRAIGHT (96906) MS15003-1	B	EA		1									D20	8
0 00618	4730-172-0034	FITTING, LUBRICATION: SUPPORT ASSEMBLY, 90 DEGREE (00000) MS15003-6	B	EA		1									D20	8
P 0 00619	2590-679-3153	GEAR SHAFT, BEVEL: HANDLE (00000) 7032133	B	EA		1	*	*	2	*	*	2	10	8	D20	7
P 0 00620	1440-331-2334	GEAR, BEVEL: SCREWSHAFT (00000) 8020174	B	EA		1	*	*	*	*	*	*	5	5	D20	12
P 0 00621	5315-543-3714	PIN, GROOVED, HEADLESS: BEVEL GEAR (00000) 443045	B	EA		1	*	*	*	*	*	*	5	5	D20	11
X20 00622	5315-062-5417	PIN, GROOVED, HEADLESS: LEVELING SCREW SHAFT (00000) 443039	B	EA		1									D20	28
X20 00623	5315-852-4114	PIN, GROOVED, HEADLESS: WHEEL AND HANDLE MTG (00000) 443024	B	EA		1									D20	4

C 47/-451 1452

(1) SMR CODE / INDEX NO	(2) FEDERAL STOCK NUMBER	(3) DESCRIPTION / REFERENCE NO & MFR CODE	USABLE ON CODE	(4) UNIT OF ISSUE	(5) QTY INC IN UNIT PACK	(6) QTY INC IN UNIT	(7) 30-DAY DS MAINT ALLOWANCE (a) 1-20	(b) 21-50	(c) 51-100	(8) 30-DAY GS MAINT ALLOWANCE (a) 1-20	(b) 21-50	(c) 51-100	(9) 1-YR ALW PER 100 EQUIP CNTGCY	(10) DEPOT MAINT ALW-PER 100 EQUIP	(11) ILLUS-TRATION (a) FIG NO	(b) ITEM NO
P 0 00624		SCREW, CAP, HEXAGON HEAD: CAP LOCK (00000) 7038131	B	EA		1	*	*	2	*	*	2	10	8	D20	35
X20 00625	2590-679-3676	SCREWSHAFT, LEVELING (00000) 7032132	B	EA		1									D20	29
X20 00626	5340-331-2340	SPACER, RING: BEVEL GEAR (00000) 8020716	B	EA		1									D20	6
X20 00627	2590-341-2388	SPACER, SLEEVE: SCREW SHAFT (00000) 8020123	B	EA		1									D20	13
X20 00628		TUBE ASSEMBLY, INNER (00000) 7032143	B	EA		1									D20	25
X20 00629		TUBE ASSEMBLY, OUTER (00000) 7032137	B	EA		1									D20	5
P 0 00630	2590-679-3156	WHEEL, METAL TIRE (00000) 7032155	B	EA		2	*	*	*	*	*	*	5	5	D20	26
P 0 00631	3120-661-9119	BEARING, SLEEVE: WHEEL (00000) 7411030	B	EA		4	*	2	2	*	2	2	20	18	D20	
X20 00632		WASHER, FLAT: CRANK ARM ASSEMBLY (00000) 7032134	B	EA		1									D20	3
0 00633	5310-012-0214	WASHER, LOCK: CRANK ARM ASSEMBLY MTG (96906) MS35338-26	B	EA		1									D20	2
X20 00634	5310-693-0738	WASHER, RECESSED: HANDLE (00000) 8331542	B	EA		1									D20	20
P 0 00635		WASHER, FLAT: SUPPORT ASSEMBLY MTG (56190) 102215-1	B	EA		1	*	*	*	*	*	*	5	5	D20	17
00636		GROUP 16 - SPRINGS AND SHOCK ABSORBERS														
00637		1601 - SPRINGS														
X20 00638		BOLT, U: SPRING MTG (98171) NP257A	A	EA		4									D17	17

242-451 1652

INDEX

STOCK NUMBER	INDEX NUMBER
7430-289-0051	00299
9515-529-9824	00180
9905-202-3639	00733
9905-205-2795	00734

	Paragraph	Page
r brake filter	3–9	14
r brake reservoir	3–9	14
r filters	3–23	21
r reservoir	3–22	21
dle Assembly, removal and installation	6–7	43
ckplate	6–2	40
arings, wheel, replace	3–16	15
ackout stoplight	3–26	24
eeding	3–18b	20
ake air chamber	3–20	21
ake drum, replace	3–16	15
akeshoes and Linings	6–3	40
ake springs, replace	3–16	15
ake valve	3–21	21
earance lights and lamps	3–25	24
earance lights and stoplights	3–6	13
ntrols and instruments	2–6	11
emolition by explosives or weapons fire	4–7	38
emolition to render the equipment inoperative	4–6	38
fference in models	1–5	3
rect support, general support, and depot maintenance repair parts	5–6	39
lter, air brake	3–9	14
rms and records	1–2, 5–2	3, 39
ame assembly, removal and installation	6–9	44
ngers and springs	3–31	30
ib, wheel, replace	3–16	15
ydraulic wheel cylinders	3–18	19
entification and tabulated data	1–4	3
specting and servicing the equipment	2–1	11
spection and maintenance of equipment in storage	4–4	37
stallation of separately packed components	2–2	11
stallation or setting-up instructions	2–3	11
nding gear	3–11	14
nding gear	3–28	30
nding gear, disassembly	3–29	30
ading equipment for shipment	4–2	37
inette	3–28	30
Master cylinder	3–8	14
Master cylinder	6–5	40
Master cylinder, hydraulic	3–19	21
Operation in dusty or sandy areas	2–10	11
Operation in extreme cold	2–9	11
Operation in salt water areas	2–11	11
Organizational maintenance repair parts	3–2	13
Other demolition methods	4–8	38
Preparation of equipment for limited storage	4–3	37
Preparation of equipment for shipment within zone of interior	4–1	37
Preparation for movement	2–4	11
Preventive maintenance checks and services	3–4	13
Reflectors	3–35	36
Reinstallation after movement	2–5	11
Reservoir, air brake	3–9	14
Safety chains	3–36	36
Seals, gaskets, replace	3–16	15
Service brakes, adjustment	3–18	19
Shock absorbers	3–30	30
Special tools and equipment	5–5	39
Specially designed (fabricated) tools and equipment	5–7	39
Spring bumpers	3–32	30
Springs	3–31	30
Taillights	3–26	24
Tabulated data, time standards	5–4	39
Time standards	5–4	39
Tires and tubes, repair	3–15	15
Tires and tubes, servicing	3–10	14
Tools and equipment	3–1	13
Trailer operation	2–8	11
Training	4–9	38
Troubleshooting	3–12	15
Troubleshooting	5–8	39
Turn signal Lights	3–26	24
Wheels	3–14	15
Wheel bearings, servicing	3–7	14
Wheel chocks	3–34	30
Wheel cylinders	6–4	40
Wiring harness	3–26	24

42-451 1652

By Order of the Secretary of the Army:

W. C. WESTMORELAND,
General, United States Army,
Chief of Staff.

Official:
KENNETH G. WICKHAM,
Major General, United States Army,
The Adjutant General.

D' tribution:
Active Army:

USASA (2)
ACSI (1)
DCSLOG (1)
CNGB (1)
TSG (1)
CofEngrs (3)
ACS-E (1)
Dir of Trans (1)
CofSptS (1)
Army Maint Bd (1)
USAARTYBD (2)
USAARENBD (2)
USAIB (2)
USAADBD (2)
USAAESWBD (2)
USAAVNBD (2)
USCONARC (3)
OS Maj Comd (5) except
USASETAF (2)
USARJ (10)
USAMECOM (46)
MDW (1)
Armies (2)
Corps (2)
Div (2)
Engr Bde (1)
Svc Colleges (2)
USMA (2)
Br Svc Sch (2) except
USAES (100)
Armor (4)
GENDEP (10)
Engr Dep (10)
Army Dep (2)
EAMTMTS (2)
WAMTMTS (2)
MOTBA (1)
MOTBY (1)
MOTKI (1)
MOTSU (1)
Div Engr (2)
Engr Dist (2)
USA Mbl Equip R&D Cen (3)
USAECFB (5)
USAREUR Engr Proc Cen (2)
USAREUR Engr Sup Con Agcy (10)
Chicago Proc Ofc (10)
Engr FLDMS (2)
Fld Comd DASA (8)
AMS (3)
USARCOMZEUR (2)
MAAG (1)
JBUSMC (1)
Units organized under the following TOE's
5-48 (2)
5-237 (5)
5-262 (5)
5-267 (1)
5-278 (5)
5-279 (2)

NG State AG (3)
USAR Same as active Army except allowance is one (1) copy per unit
For explanation of abbreviations used, see AR 320-50

242-451 165

☆ U. S. GOVERNMENT PRINTING OFFICE 1989 -242-451 1652